higher education & training

Department:
Higher Education and Training
REPUBLIC OF SOUTH AFRICA

NATIONAL CERTIFICATE (VOCATIONAL)

ROBOTICS FUNDAMENTAL
NQF LEVEL 2
(First paper)

(10041052)

22 November 2023 (Y-paper)
13:00–16:00

This question paper consists of 8 pages.

247Q1N2322

Copyright reserved

DEPARTMENT OF HIGHER EDUCATION AND TRAINING
REPUBLIC OF SOUTH AFRICA

NATIONAL CERTIFICATE (VOCATIONAL)
ROBOTICS FUNDAMENTAL
NQF LEVEL 2
(First paper)
TIME: 3 HOURS
MARKS: 100

INSTRUCTIONS AND INFORMATION

1. Answer all the questions.
2. Read all the questions carefully.
3. Number the answers according to the numbering system used in this question paper.
4. Use only a black or blue pen.
5. Write neatly and legibly.

Copyright reserved

SECTION A

QUESTION 1

Various options are given as possible answers to the following questions. Choose the answer and write only the letter (A–D) next to the question number (1.1–1.10) in the ANSWER BOOK.

1.1 What is the primary function of an industrial robot?

A Interacting with humans
B Performing tasks in manufacturing and industry
C Exploring distant planets
D Assisting in medical surgeries

1.2 Which ONE of the following best describes the concept of 'Distance' in the 5 D's of robots?

A The number of axes a robot can move along.
B The ability of a robot to reproduce movements accurately.
C The spatial reach and working range of a robot.
D The robot's sensing and perception abilities.

1.3 Why are robots developed with precise control over their movements?

A To reduce manufacturing costs
B To enhance the robot's appearance
C To perform tasks with high accuracy
D All of the above

1.4 What is the role of sensors in robotics?

A They provide power to the robot
B They control the robot's movements
C They collect data from the robot's environment
D They execute decision-making algorithms

1.5 Out of these scenarios, where would advanced computer vision capabilities be the best suited?

A Picking and placing objects on an assembly line
B Painting intricate patterns on the surface of a car
C Sorting Lego blocks by colour
D Interacting with customers at an information kiosk

1.6 Which type of robot is specifically designed for space missions?

A Industrial robot
B Medical robot
C Research robot
D Exploration robot

Copyright reserved

1.7 What was the name of the first industrial robot?

A Unimate
B R2-D2
C Asimo
D C-3PO

1.8 What does AI stand for in the context of robotics?

A Artificial Initiative
B Advanced Integration
C Automatic Intelligence
D Artificial Intelligence

1.9 What is the use of a telepresence robot?

A Conducting remote medical consultations
B Delivering packages in a warehouse
C Playing music at events
D Baking cakes in a bakery

1.10 Which ONE of the following is not a typical application of a service robot?

A Assisting customers in a store
B Providing healthcare services
C Performing welding in a factory
D Cleaning floors in households

(10 × 1) **[10]**

QUESTION 2

Indicate whether the following statements are TRUE or FALSE by writing 'True' or 'False' next to the question number (2.1–2.5) in the ANSWER BOOK. Give ONE reason for each answer.

2.1 3D Printing (3DP) is a subtractive manufacturing process that involves cutting away material from a solid block to create objects.

2.2 GPIO programming is limited to Python, and it cannot be performed using other programming languages like C++ or JavaScript.

2.3 SBCs are commonly used in projects requiring complex computing tasks, while microcontrollers are preferred for low-power, embedded systems.

2.4 Power is the rate at which electrical energy is consumed or produced in a circuit and is measured in volts (V).

2.5 Electrical conductors have high resistance, while electrical insulators have low resistance to the flow of electric current.

(5 × 2) **[10]**

Copyright reserved

QUESTION 3

Choose a term from COLUMN B that matches a description in COLUMN A. Write only the letter (A–L) next to the question number (3.1–3.10) in the ANSWER BOOK.

COLUMN A		COLUMN B	
3.1	The flow of electricity refers to the …	A	resistance
3.2	The pressure from an electrical circuit's power source that pushes charged electrons is referred to as …	B	power (watts)
		C	insulator
3.3	An electronic measuring instrument used to measure voltage, current, and resistance	D	closed circuit
		E	voltage
3.4	A circuit in which there is an unbroken path for electric current to flow	F	multimeter
3.5	A material that prevents the flow of electric current	G	continuity
		H	electrical circuit
3.6	The opposition offered by a material to the flow of electricity	I	current
3.7	A path for transmitting electricity	J	Conventional Electron-flow Theory
3.8	Used to calculate the relationship between voltage, current and resistance	K	Ohm's Law
3.9	A circuit that has two or more paths for current to flow through	L	parallel circuit
3.10	The concept that electric current flows from positive to negative terminals in a circuit		

(10 × 1) **[10]**

QUESTION 4

Complete the following sentences by writing only the missing word or words next to the question number (4.1–4.5) in the ANSWER BOOK.

4.1 … is the process of creating sets of instructions that can be executed by a computer to perform specific tasks or operations.

4.2 Physical computing involves combining the digital world of computers and the physical world of … components to create interactive systems.

4.3 An electrical system in GPIO programming typically consists of … and output components.

4.4 In GPIO programming, … are used to control the behaviour of external components like LEDs, motors, or sensors connected to GPIO pins.

4.5 … is a graphical programming language suitable for GPIO programming.

(5 × 1) **[5]**

TOTAL SECTION A: 35

SECTION B

QUESTION 5

Study the picture below and then answer the questions.

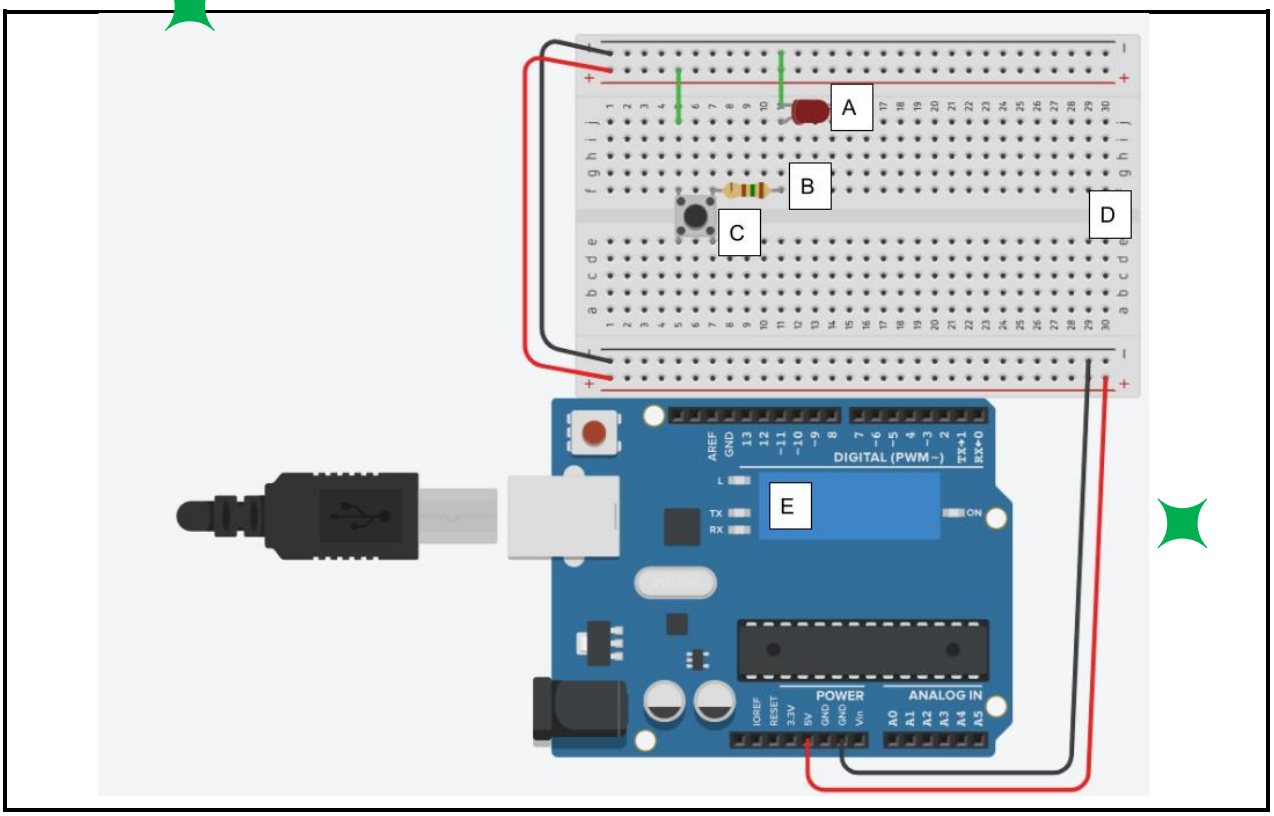

5.1 Identify the components A, B, C, D and E. (5)

5.2 State the function of A, B, C, D, and E. (5)

5.3 Draw and label a simple circuit diagram that represents the above illustration. (2)

5.4 Name one everyday device that would use a system like this? (1)

5.5 Describe what will happen when a USB cable or power source is plugged into the device and indicate what impact it will have on its connected components. (2)

[15]

QUESTION 6

Consider the scenario below and answer the questions that follow.

You are a technology and a gardening enthusiast who loves to grow plants indoors. You want to experiment with growing plants at night. The problem is you often forget to turn on the grow light when it is dark. You decide you want to make an automated light that turns on automatically when it is dark.

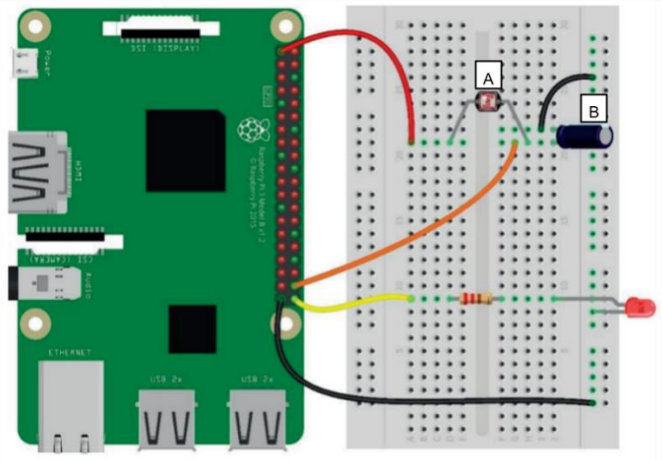


```
1. from gpiozero import LightSensor, LED
2.
3.
4. light_sensor = LightSensor(20)
5. led = LED(21)
6.
7. try:
8.     while True:
9.         light_sensor.wait_for_light()
10.        print("It's light")
11.        led.off()
12.
13.        light_sensor.wait_for_dark()
14.        print("It's dark")
15.        led.on()
16.
17. except KeyboardInterrupt:
18.     led.off()
19.     print("Exiting the program.")
```

6.1 Analyse the illustration above:

6.1.1 What components will you need to create this automated light system? (7)

6.1.2 What are the respective functions of the components labelled A and B? (2)

6.2 Draw and label a flow chart, to illustrate how the automated light system will work. (6)

6.3 Analyse the code in the illustration above:

6.3.1 What programming language was used to write this code?

6.3.2 What kind of iteration structure is used in lines 8−15?

6.3.3 Explain the declaration of line 4.

6.3.4 Explain line 8.

6.3.5 Describe what is taking place on lines 9−11.

6.3.6 Describe what is taking place on lines 13−15.

(6 × 1) (6)

6.4 You have decided to 3D print a case for this automated light system.

Having created the design, list the FOUR steps of the printing process. (4)
[25]

QUESTION 7

7.1 Name TWO common types of 3D printers.

7.2 Which TWO printing materials are commonly used in different types of 3D printers?

7.3 What are the TWO primary benefits of using 3D printing in rapid prototyping?

7.4 Name TWO ways in which 3D printing contributes to sustainable manufacturing practices.

7.5 What are some common applications of 3D printing in the medical field?

7.6 Name TWO software programs that are commonly used to convert 3D models into printable G-code instructions for FDM printers.

7.7 What is the purpose of infill in 3D printing?

7.8 Which TWO post-processing steps are commonly used to smooth the surface of 3D printed objects?

7.9 What is the significance of the layer height in 3D printing?

7.10 Give TWO reasons why a 3D print would fail.

(10 × 2) **[20]**

QUESTION 8

President Cyril Ramaphosa, on 25 February 2021, announced that the Department of Basic Education was making headway on the national rollout of coding and robotics. Ramaphosa said: “During the course of this year, 200 schools will be piloting the draft curriculum from grades R to 3, and 1000 schools will be piloting the grade 7 curriculum.” These are subjects that will assist pupils to align their skills with the knowledge of the rapidly changing world.

Name FIVE reasons why learning about coding and robotics is important.

[5]

TOTAL SECTION B: 65
GRAND TOTAL: 100

Copyright reserved