higher education & training

Department:
Higher Education and Training
REPUBLIC OF SOUTH AFRICA

# MARKING GUIDELINE

## NATIONAL CERTIFICATE (VOCATIONAL)

## PROCESS CHEMISTRY
## NQF LEVEL 2

**7 November 2022**

**This marking guideline consists of 6 pages.**

Copyright reserved

## SECTION A

### QUESTION 1

1.1 B
1.2 D
1.3 B
1.4 A
1.5 A

(5 × 1) **[5]**

### QUESTION 2

2.1 True
2.2 True
2.3 True
2.4 False
2.5 False

(5 × 1) **[5]**

### QUESTION 3

3.1 Air
3.2 Nitrogen
3.3 Oxygen
3.4 Carbon dioxide, sulphur dioxide or any other pollutants
3.5 Vacuum

(5 × 1) **[5]**

### QUESTION 4

4.1 D
4.2 E
4.3 A
4.4 C
4.5 F

(5 × 1) **[5]**

**TOTAL SECTION A: 20**

Copyright reserved 

## SECTION B

## QUESTION 5

5.1 Hardness of water refers to the dissolved salt in the water,✓ which makes it more difficult for soap to do effective cleaning. Magnesium✓ and calcium carbonates✓ form temporary hard water, whereas magnesium and calcium sulphates and chlorides are responsible for permanent hardness of water.✓ (4)

5.2 5.2.1 People or organisations that are responsible for polluting the environment must pay for all the damages caused by pollution.✓ This includes paying for the medical treatment of people✓ or animals affected, and repairing the damage caused by their activity.✓

5.2.2 The process involves rapid mixing of water with a chemical flocculant✓ in order to allow the flocculant to be evenly mixed with water✓ using a propeller turning at high speed.✓

(2 × 3) (6)

5.3 Incineration is the form of waste treatment in which organic waste is burned. (2)

5.4

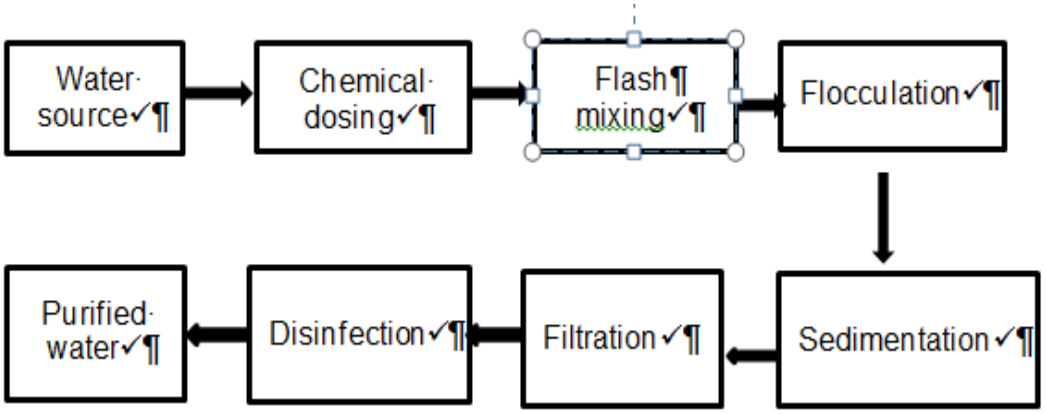


(8 × 1) (8)

**[20]**

## QUESTION 6

6.1 6.1.1 $CO_2$
6.1.2 Xe
6.1.3 Ar
6.1.4 $O_3$
6.1.5 He

(5 × 1) (5)

6.2
- Production of ammonia through the Haber process
- Extraction of metals from their oxide
- Production of hydrochloric acid
- Manufacture of hydrocarbons
- Manufacture of margarine
- Manufacture of rocket fuel

(Any 5 × 1) (5)

6.3

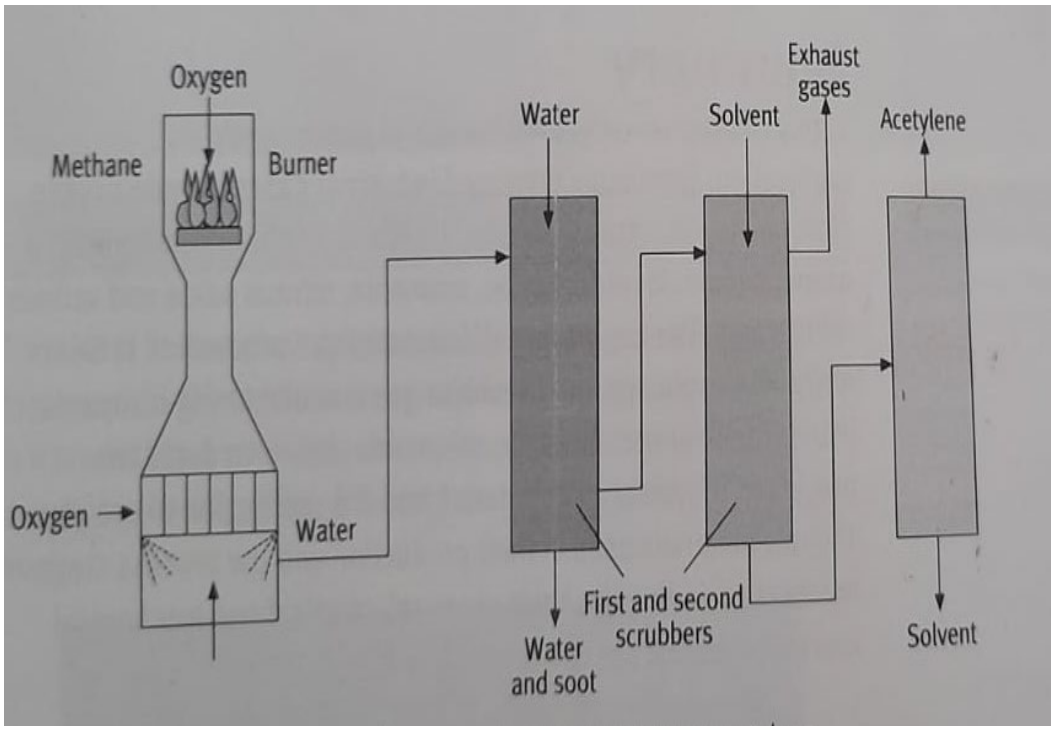


Any correct labels (10 × 1) (10)
**[20]**

## QUESTION 7

7.1
- Consol
- PG Glass
- Agi Glass
- Magma Glass Design (Any 3 × 1) (3)

7.2
- Containers such as bottles and jars and various other kitchenware
- Furniture (tables tops)
- Flat glass (used mainly for windows in buildings and cars)
- Glass fibres used in the production of fibreglass
- Electric light bulbs
- Architectural applications
- Prostheses, such as glass eyes (Any 6 × 1) (6)

7.3 7.3.1 They are used to remove bubbles from glass✓ by directly allowing them to escape the liquid glass mixture.✓
E.g. sodium sulphate✓

7.3.2 They work by changing the properties of the glass so that bubbles can escape more easily;✓ they also lower the surface tension of the glass, allowing for better bubble removal.✓
E.g. fluorine✓

7.3.3 Solution agents act by allowing gas bubbles✓ to dissolve in the glass.✓
E.g. arsenic oxide✓

(3 × 3) (9)

7.4 Cullet is recycled glass that is added to the raw materials during the glass production process. (2)

**[20]**

## QUESTION 8

8.1 During a chemical accident, you may encounter dangerous chemicals. Should you become contaminated, the chemicals on your body must be neutralised as soon as possible.✓ Go to the emergency shower as soon as possible, step on the foot pedal of the shower and remove all your PPE✓ and, if necessary, also remove your clothes as quickly as possible. Wash any chemicals from your skin with large amounts of soap and water for at least 15 minutes.✓ Go to medical station as soon as you can and report the incident to the medical officer.✓ (4)

8.2 Solid waste is unwanted solid material✓ such as garbage, paper, plastic✓ and other synthetic materials,✓ metals and wood.✓ (4)

8.3 A fire door is a door that can stop✓ the passage of heat, flames and smoke✓ for a certain period.✓ For maximum performance of fire doors,✓ they must not have cracks and holes;✓ they must also be fitted securely into the frames.✓ (6)

8.4
- First-aid gear
- Fire-fighting equipment
- Eye wash fountains
- Emergency showers

(Any 3 × 1) (3)

8.5
- Dry chemical powder
- Wet chemicals
- Water
- Foam
- $CO_2$

(Any 3 × 1) (3)

**[20]**

**TOTAL SECTION B: 80**
**GRAND TOTAL: 100**

Copyright reserved