higher education & training

Department:
Higher Education and Training
REPUBLIC OF SOUTH AFRICA

NATIONAL CERTIFICATE (VOCATIONAL)

MANUAL MANUFACTURING
NQF LEVEL 2

(6030092)

15 November 2022 (Y-paper)
13:00–16:00

This question paper consists of 6 pages.

327Q1N2215

Copyright reserved

TIME: 3 HOURS
MARKS: 100

INSTRUCTIONS AND INFORMATION

1. Answer all the questions.
2. Read all the questions carefully.
3. Number the answers according to the numbering system used in this question paper.
4. Start each section on a new page.
5. Use only a black or a blue pen.
6. Write neatly and legibly.

Copyright reserved

QUESTION 1

1.1 What is the importance of safety in the workshop? (2)

1.2

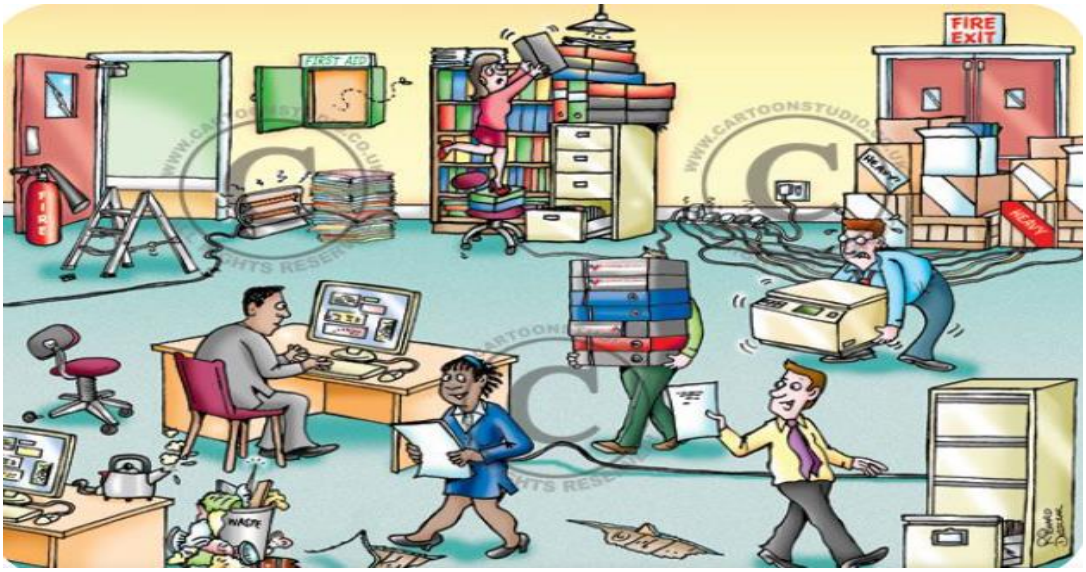

FIGURE 1

1.2.1 Study to FIGURE 1 and identify FIVE unsafe acts. (5)

1.2.2 Study to FIGURE 1 and identify FIVE unsafe conditions. (5)

1.2.3 Explain what a *hazard* is. (2)

1.2.4 Name FOUR methods of hazard prevention. (4)

1.3 Explain the purpose of the Occupational Health and Safety Act. (2)
[20]

QUESTION 2

2.1 Explain the reasons for and purpose of engineering drawings. (2)

2.2 Your supervisor asked you to produce a neat and accurate technical drawing for a new tool to be used in the workshop.
List FIVE pieces of equipment that you will need to complete the task. (5)

2.3 Draw a third-angle projection symbol. (2)
[9]

Copyright reserved

QUESTION 3

3.1 What is the purpose of marking out when producing a component? (2)

3.2 Measuring equipment in engineering can help one during the manufacture of various parts, thus ensuring proper fit between components.

State FIVE safety precautions to be taken into consideration during and after using measuring instruments. (5)

3.3 Name the labelled parts of a micro meter in FIGURE 2 by writing only the answer next to the question number (3.3.1–3.3.7) in the ANSWER BOOK.

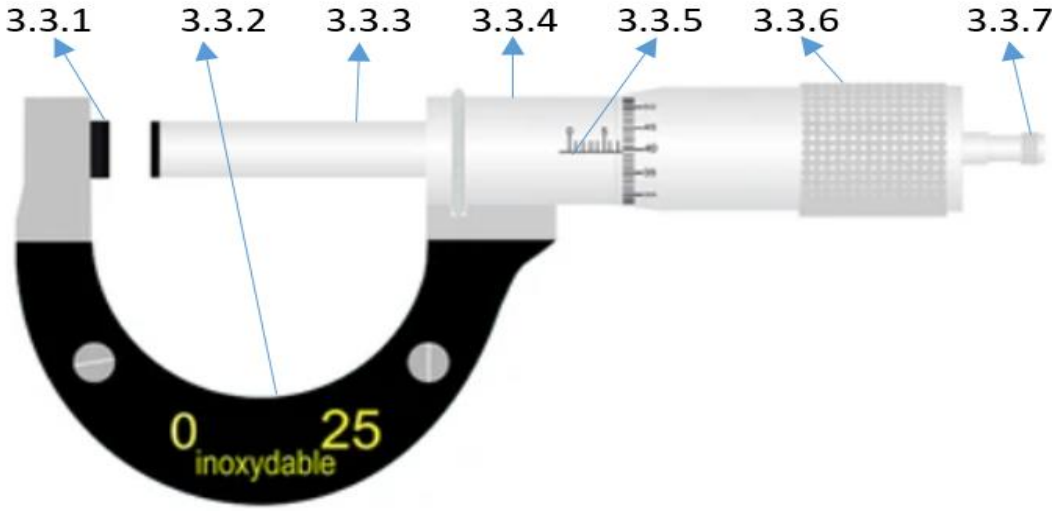

FIGURE 2 (7)

3.4 In freehand, draw a right-hand screw threads that, when assembled with a fixed mating thread, will turn in a clockwise direction. (6)

3.5 Hacksaws are used to cut different materials.

Write down FIVE causes of why hacksaw blades can fail. (5)
[25]

QUESTION 4

4.1 Study FIGURE 3 below and name the labelled components by writing only the answer next to the question number (4.1.1–4.1.8) in the ANSWER BOOK.

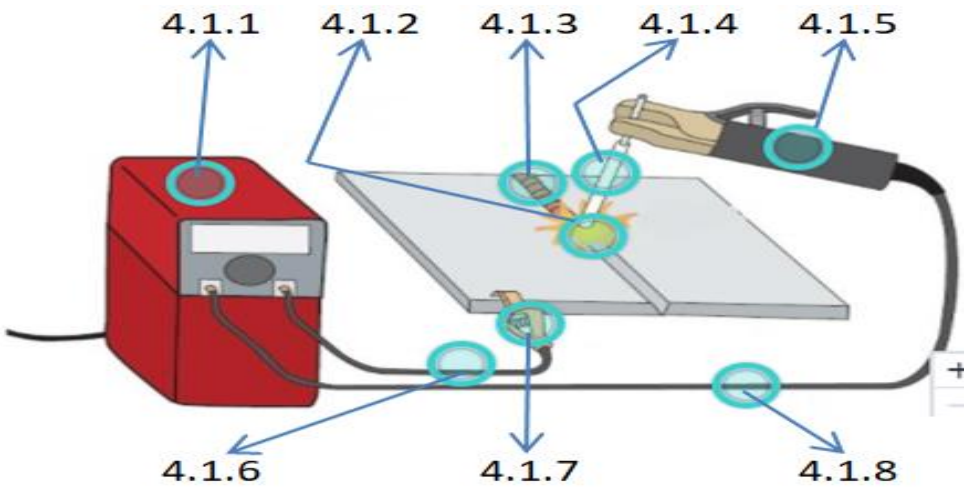

FIGURE 3 (8)

4.2 Distinguish between *gas welding* and *gas cutting*. (4)

4.3 Study FIGURE 4 below and answer the following questions that follow.



FIGURE 4

4.3.1 Soldering should always be done in a safe manner.

State FIVE safety considerations when soldering. (5)

4.3.2 Soldering irons/soldering stations comes in various sizes, shapes and wattages.

Identify FOUR factors that should be considered when selecting a soldering iron/soldering station. (4)

4.3.3 Explain how one would go about tinning the tip of a soldering iron. (3)
[24]

QUESTION 5

5.1 Explain *good housekeeping*. (2)

5.2 In the absence of good housekeeping, accidents are likely to happen.

Identify FIVE possible accidents that typically result from poor housekeeping. (5)

5.3 Safety signs and colours are very important in the workshop.

Give FIVE reasons why they are so important. (5)

5.4 Construct a table in the ANSWER BOOK showing each of the four of metals given below. Choose TWO metal types and TWO types of methods or tests that help show FOUR differences between those metals and indicate these in the TABLE:

- Cast iron
- Mild steel
- Cast steel
- High-speed steel

(10)
[22]

TOTAL: 100

Copyright reserved