higher education & training

Department:
Higher Education and Training
REPUBLIC OF SOUTH AFRICA

MARKING GUIDELINE

NATIONAL CERTIFICATE (VOCATIONAL)

INTRODUCTION TO COMPUTERS
NQF LEVEL 2

17 November 2023

This marking guideline consists of 6 pages.

Copyright reserved

QUESTION 1

1.1 Binary logic is the basis of electronic systems, such as computers and cell phones.✓ It works on 0s and 1s.✓ It involves addition, subtraction, multiplication, division of zeros and ones.✓ It includes logic gate functions, AND, OR and NOT which translate input signals into specific output. ✓ (4)

1.2
- Controller
- Process/Device
- Sensor (3)

1.3

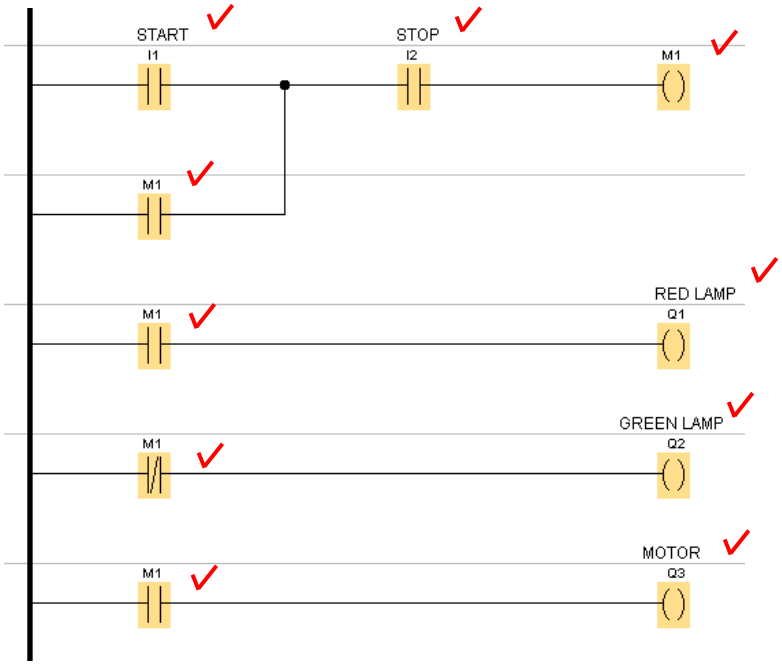

(10)

1.4 Prototyping is the process of putting together a working model in order to test various aspects of a design.

Whereas
Deployment is the process of transferring application metadata from a design time environment to a to a runtime environment. (2 × 2) (4)

1.5 Primary✓ and secondary✓ memories (2)

1.6

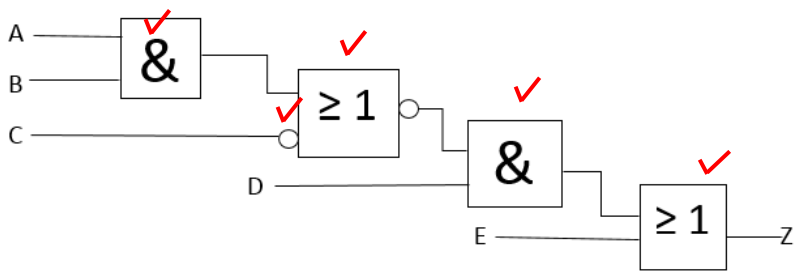

(5)

1.7
- A word is a collection of 16 bits.
- A nibble is a collection of four bits.

(2)
[30]

QUESTION 2

2.1
- ALU (arithmetic and logic unit)
- Control unit
- Registers

(3)

2.2 Processing is the manipulation or handling of data within the computer. (2)

2.3 Digital Visual Interface (1)

2.4

SYSTEM SOFTWARE	APPLICATION SOFTWARE
• System software is mainly designed for managing system resources.	• Application software is designed to accomplish tasks for specific purposes.
• Programming of system software is complex.	• Programming of application software is comparatively easy.
• A computer cannot run without system software.	• A computer is easily run without application software.
• System software does not depend on application software.	• Application software depends on system software and cannot run without system software.
• Usually written in a low-level language.	• Written in a high-level language.

(5 + 5) (10)

2.5 2.5.1 The cable is used to connect the computer to the TV in order to display the computer image on the TV screen.

2.5.2 This cable consists of 15 wires organised in three rows of five pins each.

2.5.3 One end of this cable usually has the Type A connector, but the other end can have one of several other types of connections fitted.

(3 × 2) (6)

2.6
- Increases your productivity.
- Connects you to the Internet.
- Can store vast amounts of information and reduce waste.
- Helps sort, organise, and search through information.
- Helps you learn and keeps you informed. (Any 3 × 1) (3)

[25]

QUESTION 3

3.1 Electromagnetic compatibility (1)

3.2
- Environment must be computer friendly.
- Environment must not be excessively dirty.
- Must be as close as possible to a suitable power supply.
- Must be static free.
- Protected from surge. (Any 4 × 1) (4)

3.3 Toolbar is a horizontal or vertical block of buttons and icons that can be clicked on with a mouse in a program.

Whereas
Start menu is the menu system that provides instant access to recently opened documents, computer settings, installed programs, help, favourite Internet sites, and the Shut Down menu. (2 × 2) (4)

3.4 Unplug the keyboard from the back of the computer✓ and make sure it is correctly plugged back into the computer.✓ The green light on the keyboard should flash, meaning there is connection.✓ Test the keyboard by pressing F1 to continue.✓ (4)

3.5
- Paper
- Ink
- No power
- Loose cable or plug (4)

3.6
- Click on the Start button and select Control Panel.
- From the Control Panel, select Add or Remove Programs.
- To install the application, click on Add New Programs
- You will be presented with two options: to install the program, both will guide you through the installation process. (Any 3 × 1) (3)

Copyright reserved

3.7
- Power surges: blow computer components and burn parts of the wiring on the motherboard. ✓
- Heat protection measures: minimise the heat in the computer by either placing heat sinks on your CPU and other processing chips to cool it down. ✓✓
- Dust protection measures: place your computer in an area that has less dust, e.g. place your tower box on the desk instead of on the floor. ✓
- Electro-static: damages the electronic components in your computer. ✓ (5)

[25]

QUESTION 4

4.1
4.1.1 Ctrl + C
4.1.2 Ctrl + V
4.1.3 Ctrl + X

(3 × 1) (3)

4.2
- Spreadsheets are not secure.
- Reporting is painful.
- Visualizing data is difficult.
- Spreadsheets are prone to errors.
- Spreadsheets are not user-friendly. (Any 3 × 1) (2)

4.3
- Predefined is to pre-set or define in advance.
- Cumbersome is difficult to handle. (2)

4.4
- Sum
- Average
- Max
- Min (3)

[10]

QUESTION 5

5.1
- Back button – click on this button to go back to the page you were on previously.
- Forward button – click on this button to return to the page you were on before you hit the back button, or to move from an existing page to the next page.
- Reload/Refresh button – click on this button to reload the page you are currently viewing.
- Stop button – click this button to stop loading the page you are currently loading. (Any 2 × 2) (4)

5.2 An identification used by a person with access to a computer, network, or online service. (2)

5.3
- Clicking on a text link
- Clicking on hyperlinked graphic
- Typing in the URL of the web page in the location box of your web browser and the pressing the Enter or Return key. (3)

5.4 When you want to send a single message to a large group of people (1)
[10]

TOTAL: 100

Copyright reserved