higher education & training

Department:
Higher Education and Training
REPUBLIC OF SOUTH AFRICA

MARKING GUIDELINE

NATIONAL CERTIFICATE (VOCATIONAL)

INTRODUCTION TO COMPUTERS
NQF LEVEL 2

8 November 2022

This marking guideline consists of 6 pages.

Copyright reserved

QUESTION 1

1.1 1.1.1 MSB – most significant bit,✓ the bit with the highest place value in a binary number✓

1.1.2 LSB – least significant bit,✓ the bit with the lowest place value in a binary number✓

(2 × 2) (4)

1.2 1.2.1

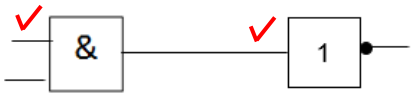

1.2.2



(2 × 2) (4)

1.3

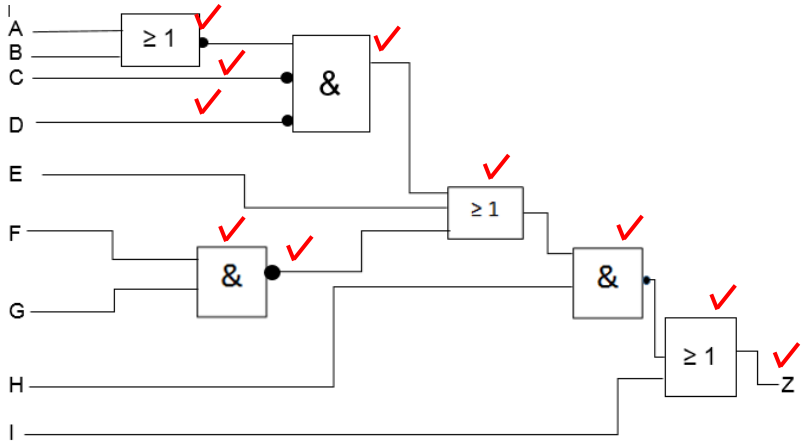

(10 × 1) (10)

1.4
- Flip-flop
- Register

(2)

1.5 1.5.1 $5_{10} = 0101_2$,✓ $11_{10} = 1011_2$✓
$0101_2 - 1011_2$

$+0100_2$ 1st complement✓
$\underline{0101_2}$ carry not under✓
1001_2
$-\ 0110$ 1st complement with negative✓
$= -0110_2$ (5)

1.5.2 $1011_2 \times 1001_2$

1 0 1 1✓
1 0 0 1✓
1 0 1 1✓
0 0 0 0
0 0 0 0
1 0 1 1 +✓
1 1 0 0 0 1 1 1_2✓

(5)
[30]

QUESTION 2

2.1
- An ALU functions as subtraction, multiplication, addition and division as well as logic operation, such as incrementing and decrementing numbers.
- A CU obtains instructions from the memory and decodes and executes them. The CU controls what happens inside the CPU.
- Registers are used to store information involved in program execution. Registers act as a temporary storage location for the ALU. (2 × 3)

(6)

2.2 2.2.1 Full duplex signals (communication) can flow in both directions✓ at the same time over one line.✓

2.2.2 A parallel interface is a multichannel in which data is transferred simultaneously over separate wires.

2.2.3 Input is entered into the computer via some sort of input device.✓ The device allows a user to enter data and commands into the memory of the computer.✓

2.2.4 A wide-area network (WAN) is a large network that operates in large geographic areas, such as from one city to another or from one country to another, and whose communication links can cross national boundaries.

2.2.5 A node is a computer that is attached to a network, sometimes called a 'host'.

(5 × 2) (10)

Copyright reserved

2.3

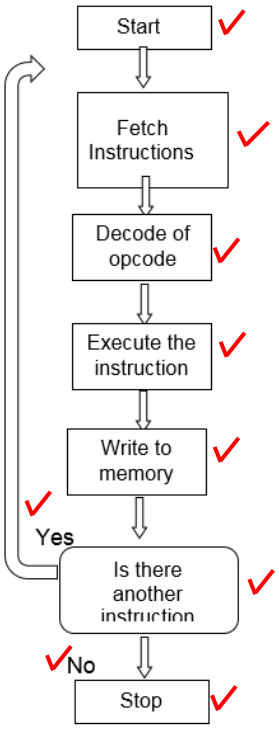

(9 × 1) (9)
[25]

QUESTION 3

3.1 The recycle bin acts as a holding bay for deleted items such as files and folders. (2)

3.2
- Go to the file name of the file you want to compress.
- Right-click, which will open a dialogue box.
- Move your cursor over Send To, which will open the minimised box within the Send To icon showing different options.
- Select Compressed Folder and left-click on it. (4)

3.3
- Your computer will show the End Program dialogue screen✓ when or if it becomes aware that the application has ceased to run properly.✓
- Select End Program and the computer will attempt to force the application to close.✓ (3)

3.4 A toolbar is a horizontal or vertical block of buttons and icons that can be clicked on with a mouse in a program.✓✓

The start menu is the system that provides instant access✓ to recently opened documents, computer settings, installed programs, help, favourite Internet sites and the shut-down menu.✓✓ (2 + 3) (5)

3.5 If you want to delete a file or folder permanently and you do not want the item to go to the recycle bin, hold the shift key as you select the delete option from the panel. That will result in an immediate, permanent deletion of the file or folder from your system. (2)

3.6
- Change the background wallpaper
- Change the position of the image on your screen
- Change the background colour (3)

3.7 Minimise is when you make a window smaller so that its name tab sits at the bottom of the screen, allowing other programs or documents to display while the minimised program or document is still running.
Maximise is when you enlarge or bring back a program or document from minimised so that the window covers the screen and can be worked on.
Resizing is when you click the 'maximise' button when the window is already maximised, after which the window will resize itself to roughly three-quarters of the maximised size. (3 × 2) (6)

[25]

QUESTION 4

4.1

Items	Features	Basic or Advanced	Description
1	WYSIWYG	Advanced✓	The document appears on the editor screen exactly as it will on the final printed copy✓
2	File management	Advanced✓	Create, manage and delete documents as files✓
3	Copy text	Basic✓	Insert text in the document✓

(6 x 1) (6)

4.2 A drop-down menu is a navigation menu that drops down when you click it with a mouse, displaying context-related options. (2)

4.3 CTRL + P (2)

[10]

QUESTION 5

5.1 A dial-up connection is a common type of Internet connection available from ISPs (Internet service providers).✓ It allows you to connect to the Internet by dialling a phone number given to you by the ISP✓ and using a standard 5K modem.✓ (3)

5.2 A cable connection is considered one of the best types of Internet connections available, as it offers a very fast and reliable connection at a fixed monthly fee.✓ A cable connection uses a totally separate medium to transfer data✓ and it has no effect on your ability to make or receive phone calls.✓ (3)

5.3 3G is a third generation of cell phone standards and technology✓ that offers its users high speed, wide-area Internet access, data, video and CD-quality music services.✓ With 3G, you can access data and information almost any time and from any place.✓ (3)

5.4 Asymmetric digital subscriber line (1)
[10]

TOTAL: 100

Copyright reserved