higher education & training

Department:
Higher Education and Training
REPUBLIC OF SOUTH AFRICA

NATIONAL CERTIFICATE (VOCATIONAL)

FITTING AND TURNING
NQF LEVEL 2

(6011042)

28 November 2023 (Y-paper)
13:00–16:00

Non-programmable calculators may be used.

This question paper consists of 6 pages.

457Q1N2328

Copyright reserved

DEPARTMENT OF HIGHER EDUCATION AND TRAINING
REPUBLIC OF SOUTH AFRICA

NATIONAL CERTIFICATE (VOCATIONAL)
FITTING AND TURNING
NQF LEVEL 2
TIME: 3 HOURS
MARKS: 100

INSTRUCTIONS AND INFORMATION

1. Answer all the questions.
2. Read all the questions carefully.
3. Number the answers according to the numbering system used in this question paper.
4. Start each section on a new page.
5. Use only a black or blue pen.
6. Write neatly and legibly.

Copyright reserved

QUESTION 1

1.1 Indicate whether the following statements are TRUE or FALSE by writing only 'True' or 'False' next to the question number (1.1.1–1.1.5) in the ANSWER BOOK.

1.1.1 Plant housekeeping means a place for everything and everything in its place all the time.

1.1.2 Always adhere to all safety signs.

1.1.3 Always use waste or rags when removing chips from a drill.

1.1.4 Injuries caused by machines are usually not severe and temporary.

1.1.5 The operator should use a grinding wheel which is damaged, or which is not properly dressed.

(5 × 1) (5)

1.2 FIGURE 1 shows a bench grinding machine.

Name the items labelled (A–F) in the ANSWER BOOK.

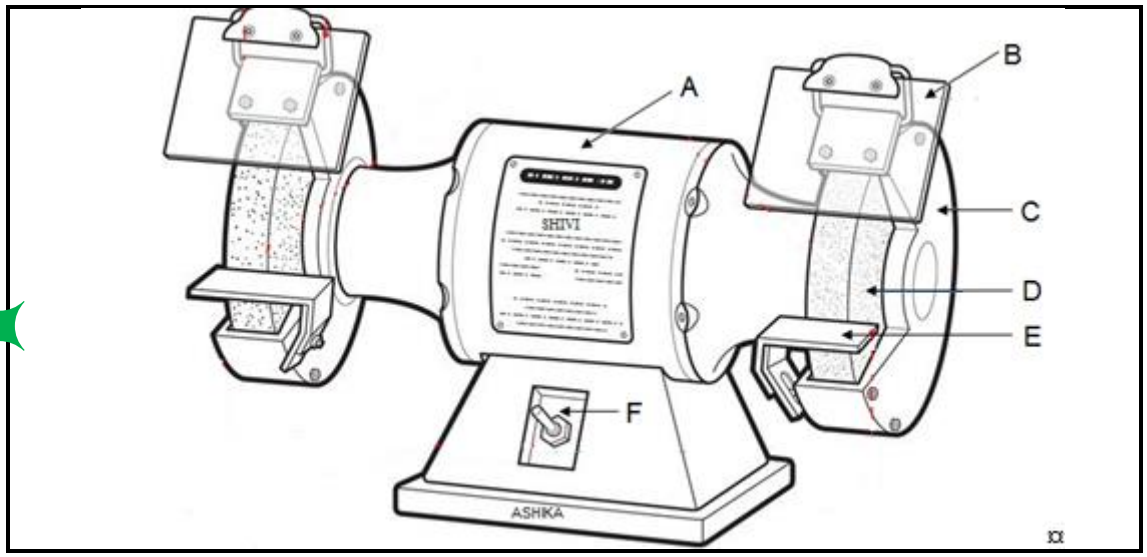

FIGURE 2

(6 × 1) (6)

1.3 Calculate the rotational speed of the grinding wheel in revolutions per minute (r/min) if the wheel has a diameter of 200 mm and a turning speed of 1 670 m/min. (5)

1.4 Draw and label a neat diagram of a screw thread.

Show the following parts:
flank, pitch, root diameter, crest, crest diameter. (6 × 1) (6)

Copyright reserved

1.5 Reamers are used to shape and enlarge drilled holes.

Name THREE types of reamers. (3 × 1) (3)

[25]

QUESTION 2

2.1 FIGURE 2 shows a radial arm drilling machine.

Name the items labelled (A–F) in the ANSWER BOOK.

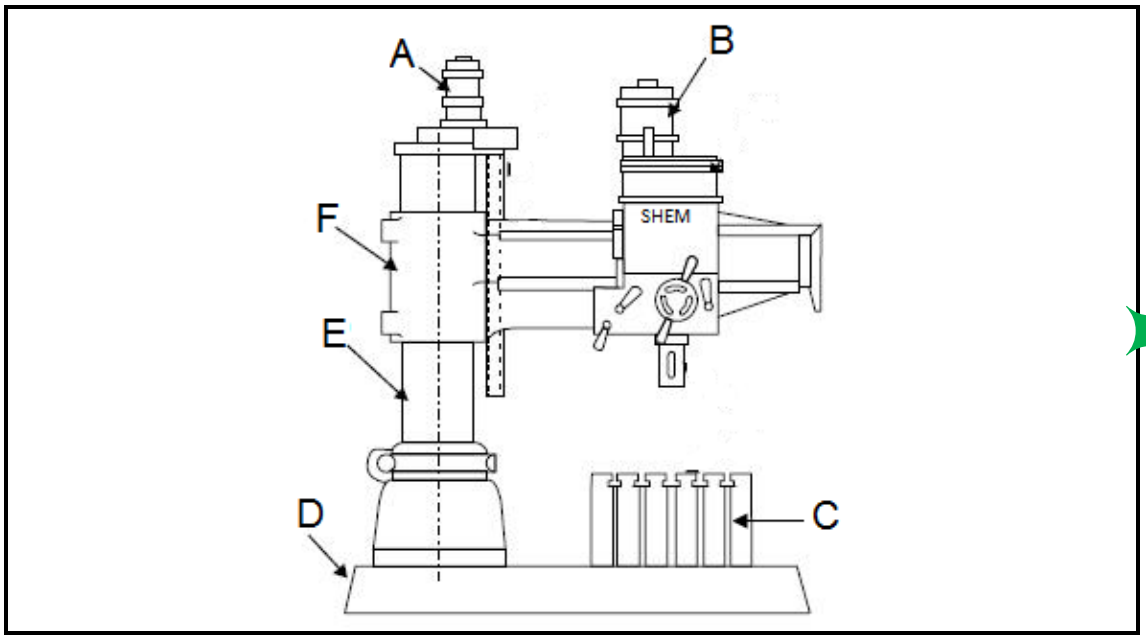

FIGURE 3

(6 × 1) (6)

2.2 V-blocks are used to position and hold circular work pieces.
Draw and label a V-block.

Show the following components:
V-block, clamp, circular work piece and T-bolt. (6)

2.3 Name the coolants that are used for the following materials:

2.3.1 Cast iron

2.3.2 Tool steel

2.3.3 Stainless steel

(3 × 1) (3)

2.4 State FOUR steps that need to be followed when fitting a Woodruff key.

(4 × 1) (4)

2.5 Name TWO main types of circlips that are fitted into a machined groove on the surface of a round shaft. (4)

2.6 What is a Helicoil spring that is used to correct an invariable in a hole? (2)
[25]

QUESTION 3

3.1 List FIVE turning operations that are performed on a centre lathe. (5 × 1) (5)

3.2 Explain how the height of a cutting tool is set up on a centre lathe.

Hint: The tailstock is used. (5)

3.3 FIGURE 4 shows a tailstock used on a centre lathe.

Name the items labelled (A–F) in the ANSWER BOOK.

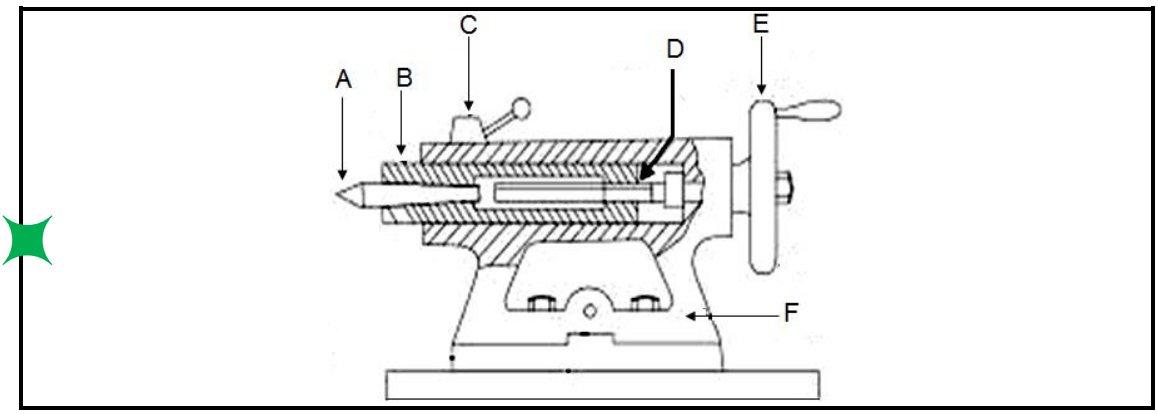

FIGURE 4

(6 × 1) (6)

3.4 When a parting operation is done on a centre lathe, parting tools often fail or break.

State any FIVE reasons why parting tools fail or break. (Any 5 × 1) (5)

3.5 List FOUR advantages of a four-jaw chuck compared to a three-jaw chuck.
(4 × 1) (4)
[25]

QUESTION 4

4.1 List FIVE steps that an operator should follow when selecting and mounting a milling machine vice. (5 × 1) (5)

4.2 Complete the following paragraph by choosing a word from the list below. Write only the answer next to the question number (4.2.1–4.2.5) in the ANSWER BOOK.

table trips; knee; column; saddle; overarm

The (4.2.1) … provides support and corrects alignment for the arbor. The (4.2.2) … fits to the column and can be moved up or down. The (4.2.3) … automatically trips the table at pre-set positions. The (4.2.4) … fits on top of the knee. The base is at the bottom of the machine and supports the (4.2.5) … .
(5 × 1) (5)

4.3 FIGURE 5 shows FIVE different types of cutting tools used on milling machines.

Name each cutting tool by writing the correct answer next to the letter (A–E) in the ANSWER BOOK.

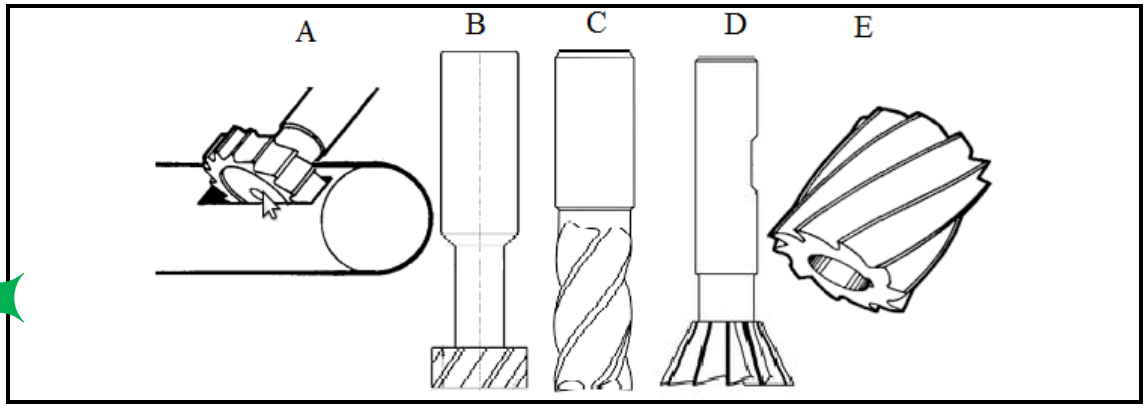

FIGURE 5

(5 × 1) (5)

4.4 An engineering drawing indicates the dimensions for the manufacture of a work piece.
Explain the following working tolerance: 12 ± 0,02 mm (5)

4.5 Explain how a machine vice is aligned up on a milling machine using a dial test indicator (DTI). (5)
[25]

TOTAL: 100

Copyright reserved