higher education & training

Department:
Higher Education and Training
REPUBLIC OF SOUTH AFRICA

NATIONAL CERTIFICATE (VOCATIONAL)

FITTING AND TURNING
NQF LEVEL 2

(6011042)

17 November 2022 (Y-paper)
13:00–16:00

Calculators may be used.

This question paper consists of 7 pages.

473Q1N2217

Copyright reserved

TIME: 3 HOURS
MARKS: 100

INSTRUCTIONS AND INFORMATION

1. Answer all the questions.
2. Read all the questions carefully.
3. Number the answers according to the numbering system used in this question paper.
4. Start each section on a new page.
5. Use only a black or a blue pen.
6. Write neatly and legibly.

Copyright reserved

QUESTION 1

1.1 Various options are given as possible answers to the following questions. Choose the answer and write only the letter (A–D) next to the question number (1.1.1–1.1.5) in the ANSWER BOOK.

1.1.1 Oil on the workshop floor must be cleaned …

A immediately.
B just before the end of one's shift.
C only after the supervisor tells you.
D when you receive a job card.

1.1.2 When can a centre lathe be operated at excessive high speed?

A When there is a break down
B A centre lathe must never be operated at excessive high speed
C Only when the supervisor gives permission
D When cutting soft wood on the centre lathe

1.1.3 When can equipment be stored in the area painted red in the workshop?

A When there is a break down
B When there is no place in the work shop
C Equipment must not be stored in the area painted red in the workshop
D Only at the end of one's shift

1.1.4 Good housekeeping means:

A A strong workshop
B Having good lighting in the workshop
C A good supervisor who looks after the workshop
D Keeping the work area neat, tidy, free from hazards and a place for everything and everything in its place.

1.1.5 When should machinery and tools be cleaned?

A After use
B The next day
C While the machine is rotating
D Only after one has received a job card

(5 × 1) (5)

Copyright reserved

1.2 FIGURE 1 shows a Huntington Wheel dresser with a set of cutters. Give THREE disadvantages of the wheel dresser.



FIGURE 1 (3)

1.3 List FIVE factors that must be considered when selecting a grinding wheel. (5)

1.4 Give TWO functions of cutting fluid/coolant when grinding. (2)

1.5 Draw a neat labelled diagram of an ACME screw thread. Label the following:

The pitch, the angle of the thread and the depth of the thread. (5)

1.6 Taps are used to form internal threads. Name the THREE taps that a set consists of. (3)

1.7 State the function of a solid die. (2)

[25]

Copyright reserved

QUESTION 2

2.1 FIGURE 2 shows a pillar type drilling machine. Name the labelled parts by writing only the answer next to the letter (A–F) in the ANSWER BOOK.

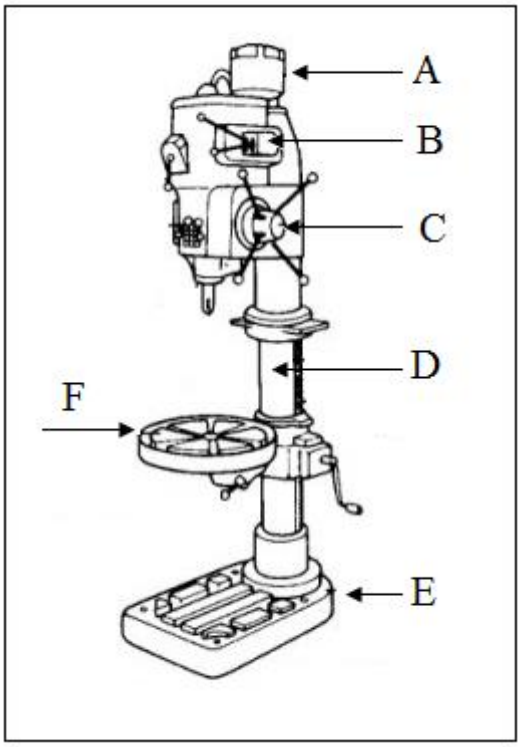

FIGURE 2 (6)

2.2 You are required to drill a 10 mm hole in an aluminium plate. The cutting speed for an aluminium is 50 m/min. Calculate the spindle speed in revolutions per minute. (6)

2.3 While drilling a work piece, you notice that the drilling machine begins to make an unusual noise and begins to vibrate. List FIVE possible problems that can cause the noise and vibration. (5)

2.4 Keys are installed to prevent components from revolving on a shaft. Draw and name the following type of keys: rectangle key (square end), Woodruff key, gib-head key and a taper key. (8)

[25]

QUESTION 3

3.1 List FIVE items of personal protective equipment (PPE) that a fitter and turner must use while operating a centre lathe. (5)

3.2 Name FIVE types of cutting tools that are used for cutting on a centre lathe. (5)

3.3 Choose a description from COLUMN B that matches the drawing in COLUMN A. Write only the letter (A–I) next to the question number (3.3.1–3.3.6) in the ANSWER BOOK.

COLUMN A	COLUMN B
3.3.1 	A three jaw chuck
3.3.2 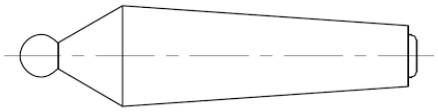	B tap wrench
3.3.3 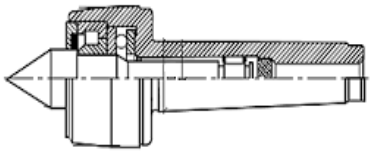	C lathe steady
3.3.4 	D ball centre
3.3.5 	E roughing tool
3.3.6 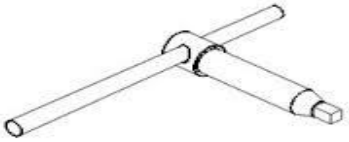	F chuck key
	G four jaw chuck
	H revolving centre
	I parting tool

(6 × 1) (6)

3.4 Explain how a knurling tool is set up on a centre lathe. (4)

3.5 Give FIVE reasons why it is important to clean a centre lathe after use. (5)
[25]

QUESTION 4

4.1 FIGURE 3 shows a milling machine.

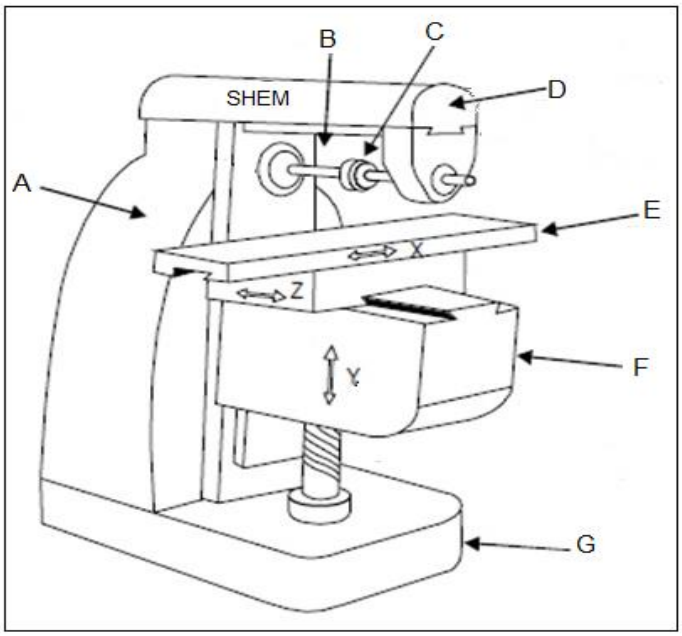

FIGURE 3

4.1.1 Name the labelled parts by writing only the answer next to the letter (A–G) in the ANSWER BOOK. (7)

4.1.2 Refer to FIGURE 3.
X, Y and Z represent THREE movements of a milling machine.

Choose the correct answer from those given below and write it next to the letter (X–Z) in the ANSWER BOOK.

Horizontal movement of the arbor
Horizontal movement of the table
Vertical movement of the table
Cross movement of the cutting tool
Cross movement of the table

(3)

4.2 List SIX machining operations that can be performed on a milling machine. (6)

4.3 A slot cutter is a cutting tool used on a milling machine. Make a drawing of a slot cutter showing the cutting edges and the direction of rotation used during cutting. (4)

4.4 Name FIVE factors that need to be considered when selecting the cutting speed on a milling machine. (5)
[25]

TOTAL: 100

Copyright reserved