higher education & training

Department:
Higher Education and Training
REPUBLIC OF SOUTH AFRICA

NATIONAL CERTIFICATE (VOCATIONAL)

ENGINEERING GRAPHICS AND TECHNOLOGY
NQF LEVEL 2

(12050682)

21 November 2023 (Y-paper)
13:00–17:00

REQUIREMENTS: A2 drawing paper

Drawing instruments may be used.

This question paper consists of 6 pages.

209Q1N2321

Copyright reserved

DEPARTMENT OF HIGHER EDUCATION AND TRAINING
REPUBLIC OF SOUTH AFRICA

NATIONAL CERTIFICATE (VOCATIONAL)
ENGINEERING GRAPHICS AND TECHNOLOGY
NQF LEVEL 2
TIME: 4 HOURS
MARKS: 100

INSTRUCTIONS AND INFORMATION

1. Answer all the questions.
2. Read all the questions carefully.
3. Number the answers according to the numbering system used in this question paper.
4. Use both sides of the drawing sheet.
5. A 15 mm border must be drawn on both sides of the drawing sheet.
6. All drawing work, including the candidate's information, must be done in pencil.
7. All the abbreviations and symbols must comply with the latest SABS 0111 Code of Practice for Engineering Drawing.
8. Work neatly and write legibly.

Copyright reserved

QUESTION 1: FUNDAMENTALS OF ENGINEERING GRAPHICS AND TECHNOLOGY

1.1 Give the meaning of the following abbreviations that are used in Engineering Graphics and Technology.

1.1.1 SABS

1.1.2 SFACE

1.1.3 UCUT

(3 × 1) (3)

1.2 Print the answers for QUESTION 1.1.1-1.1.3 on the DRAWING SHEET, using CAPITAL LETTERS of 5 mm high. (2)

[5]

QUESTION 2: FREEHAND DRAWING

FIGURE 1 shows a view of a component of a pulley.

Use a pencil and an eraser and draw the view of the component of the pulley in good proportion, approximately the given size.

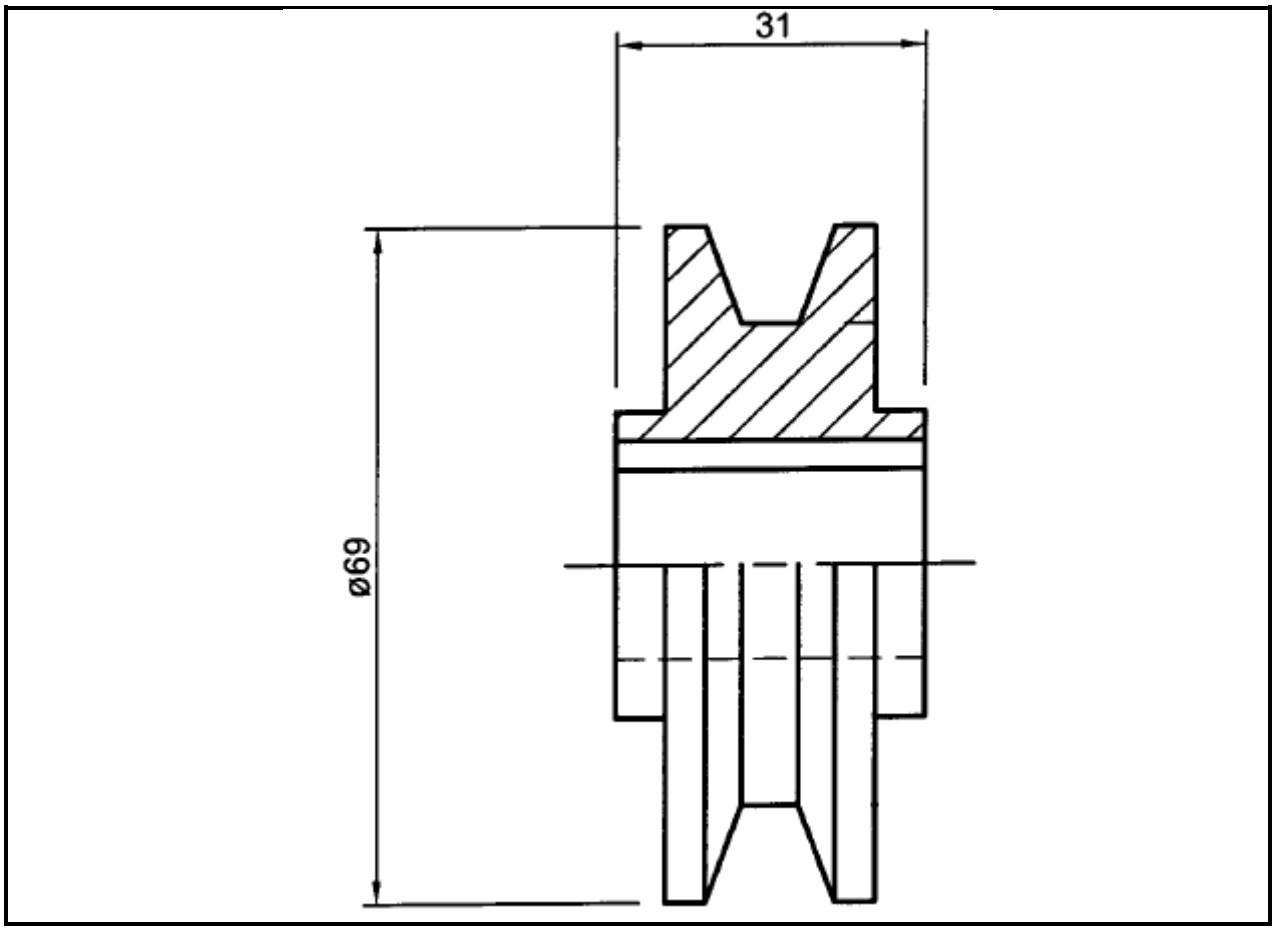

FIGURE 1

[15]

Copyright reserved

QUESTION 3: GEOMETRICAL CONSTRUCTION

FIGURE 2 shows the front view of a machine part. Draw, to scale 1:1 the given front view of the machine part. Show all the construction lines and insert any FOUR dimensions.

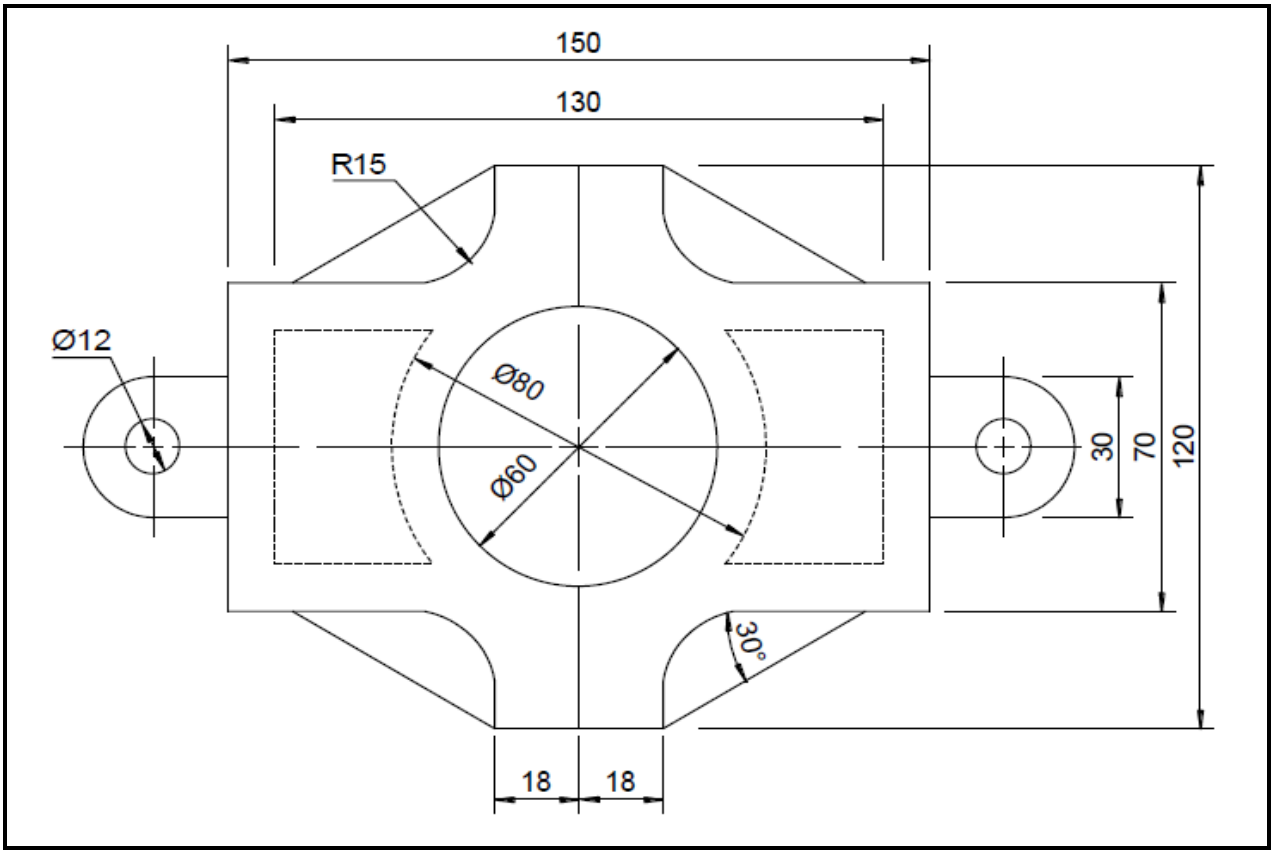

FIGURE 2

[20]

QUESTION 4: LOCI

Construct the involute of a CIRCLE with a diameter of 60 mm in a clockwise direction. Show ALL the geometrical construction lines and numbering. Use any appropriate scale. **[15]**

QUESTION 5: ORTHOGRAPHIC PROJECTION

FIGURE 3 shows an isometric view of a key block. DO NOT draw the given view, but draw to scale 1:2 and in third-angle orthographic projection, the following views of the key block:

5.1	Front view as seen in the direction of arrow A	(5)
5.2	Right view	(7)
5.3	Top view	(6)
5.4	Add the projection system symbol centrally below the drawings	(2)
5.5	Add any FIVE dimensions	(5)

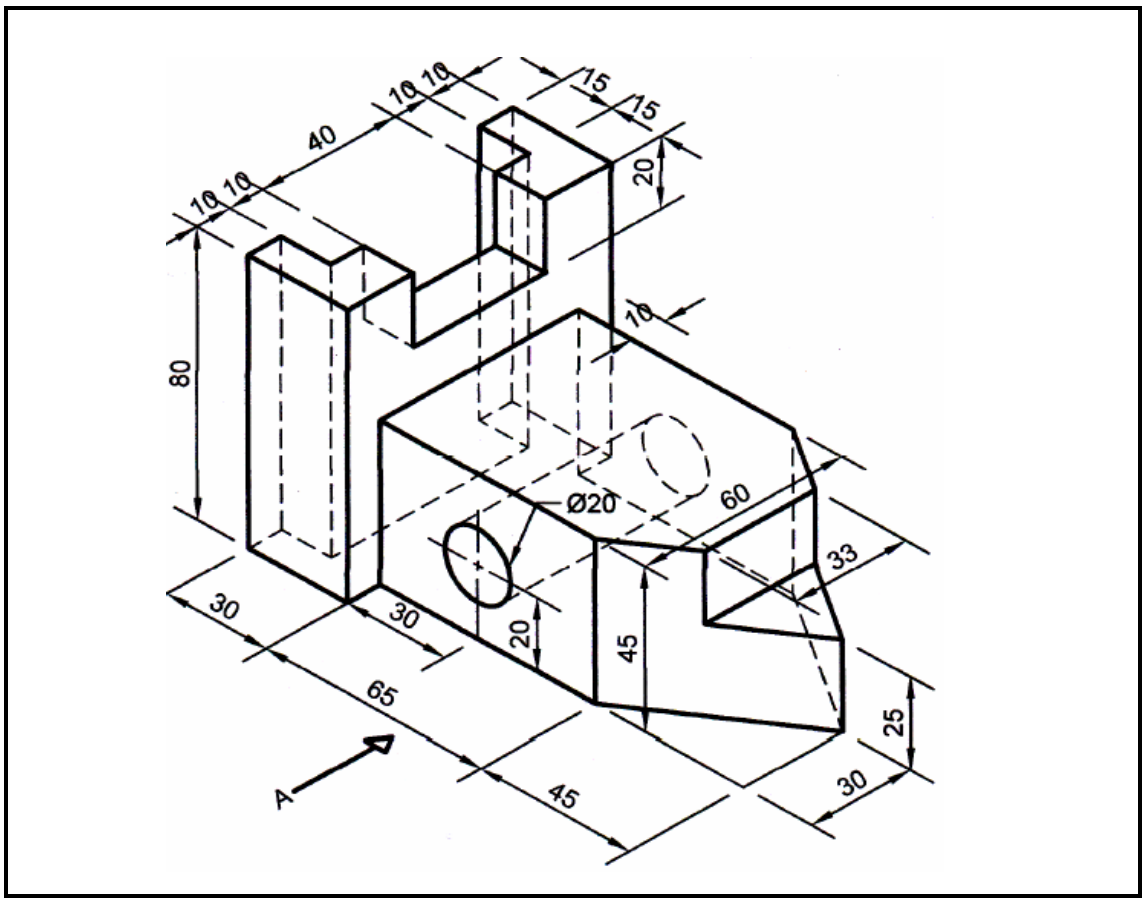

FIGURE 3

[25]

QUESTION 6: PICTORIAL DRAWING

FIGURE 4 shows two views of a block in first-angle orthographic projection. Draw a two-point perspective drawing of the block. The height of the eye in front of the picture plane is 86 mm and the distance in front of the picture is 48 mm.

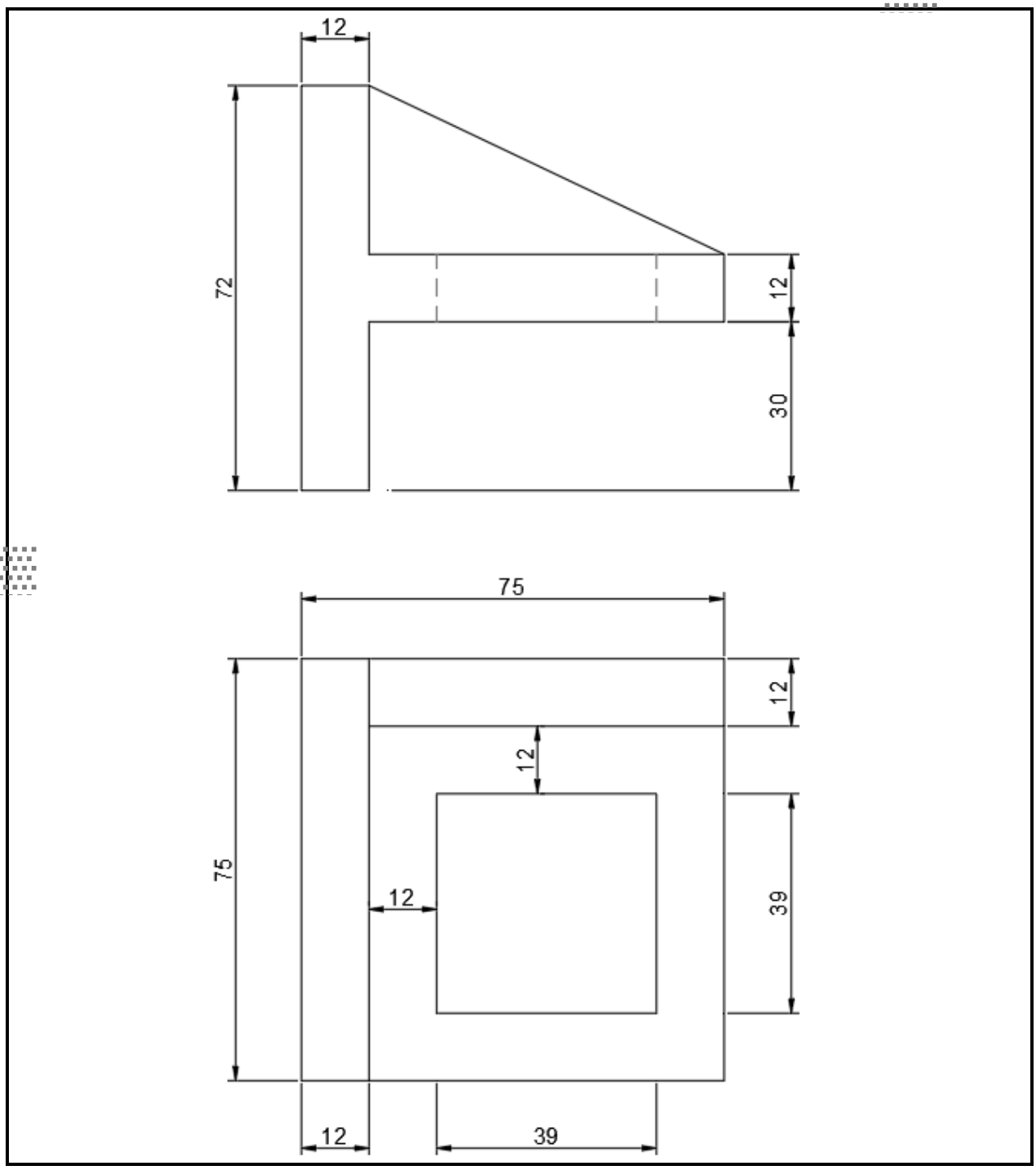

FIGURE 4

[20]

TOTAL: 100

Copyright reserved