higher education & training

Department:
Higher Education and Training
REPUBLIC OF SOUTH AFRICA

MARKING GUIDELINE

NATIONAL CERTIFICATE (VOCATIONAL)

ENGINEERING GRAPHICS AND TECHNOLOGY
NQF LEVEL 2

21 November 2023

This marking guideline consists of 6 pages.

Copyright reserved

QUESTION 1: FUNDAMENTALS OF ENGINEERING GRAPHICS AND TECHNOLOGY

1.1 1.1.1 South African Bureau of Standards
1.1.2 Spotface
1.1.3 Undercut

(3 × 1) (3)

1.2 Correct printing (2)

[5]

QUESTION 2: FREEHAND DRAWING

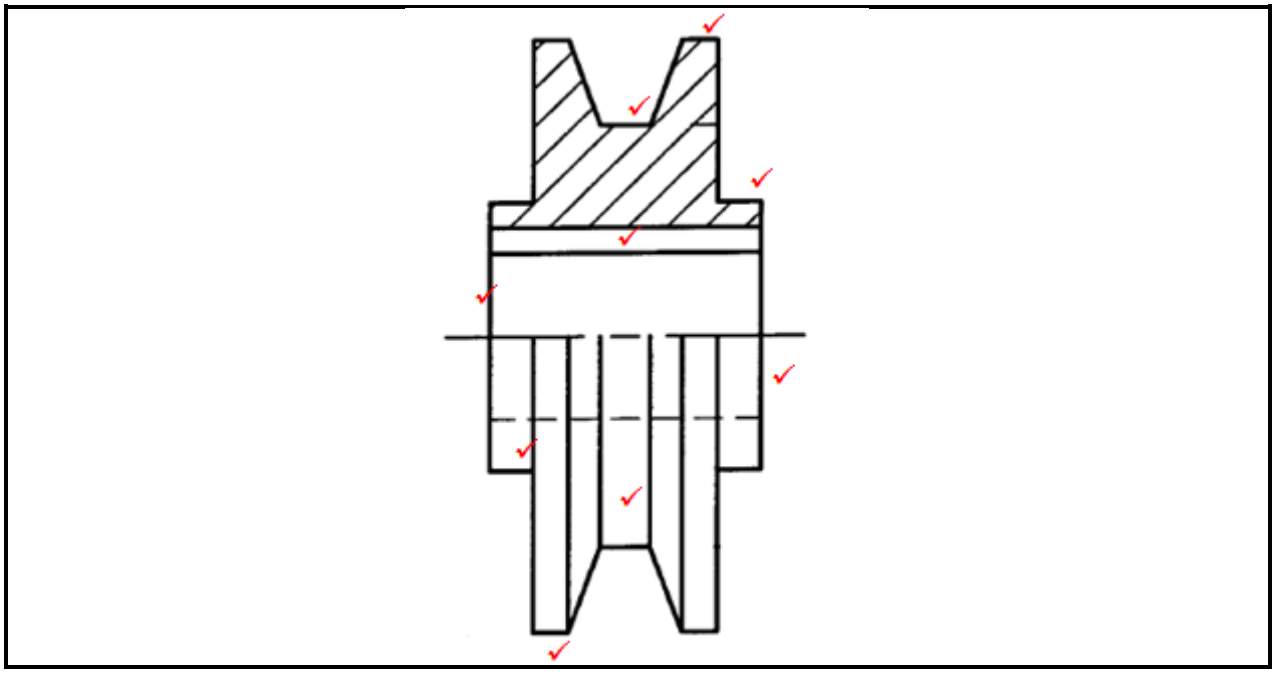

FIGURE 1

MARK ALLOCATION

CORRECTNESS	9%
ACCURACY	2%
LINE WORK	2%
LAYOUT AND NEATNESS	2%
TOTAL	15%

[15]

QUESTION 3: GEOMETRICAL CONSTRUCTION

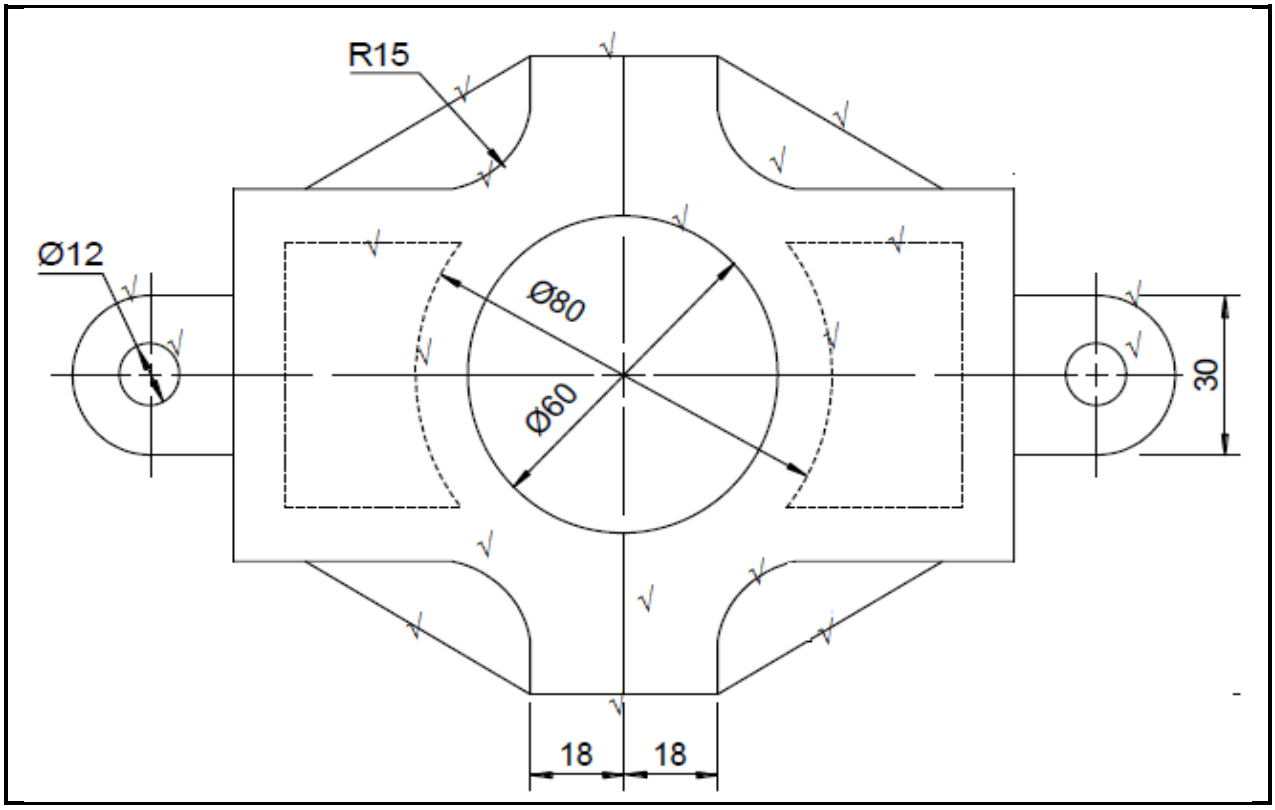

FIGURE 2

MARK ALLOCATION

CORRECTNESS	10%
CONSTRUCTION LINES	2%
ACCURACY	2%
LINE WORK	1%
LAYOUT AND NEATNESS	1%
ANY FOUR DIMENSIONS	4%
TOTAL	20%

[20]

Copyright reserved

QUESTION 4: LOCI

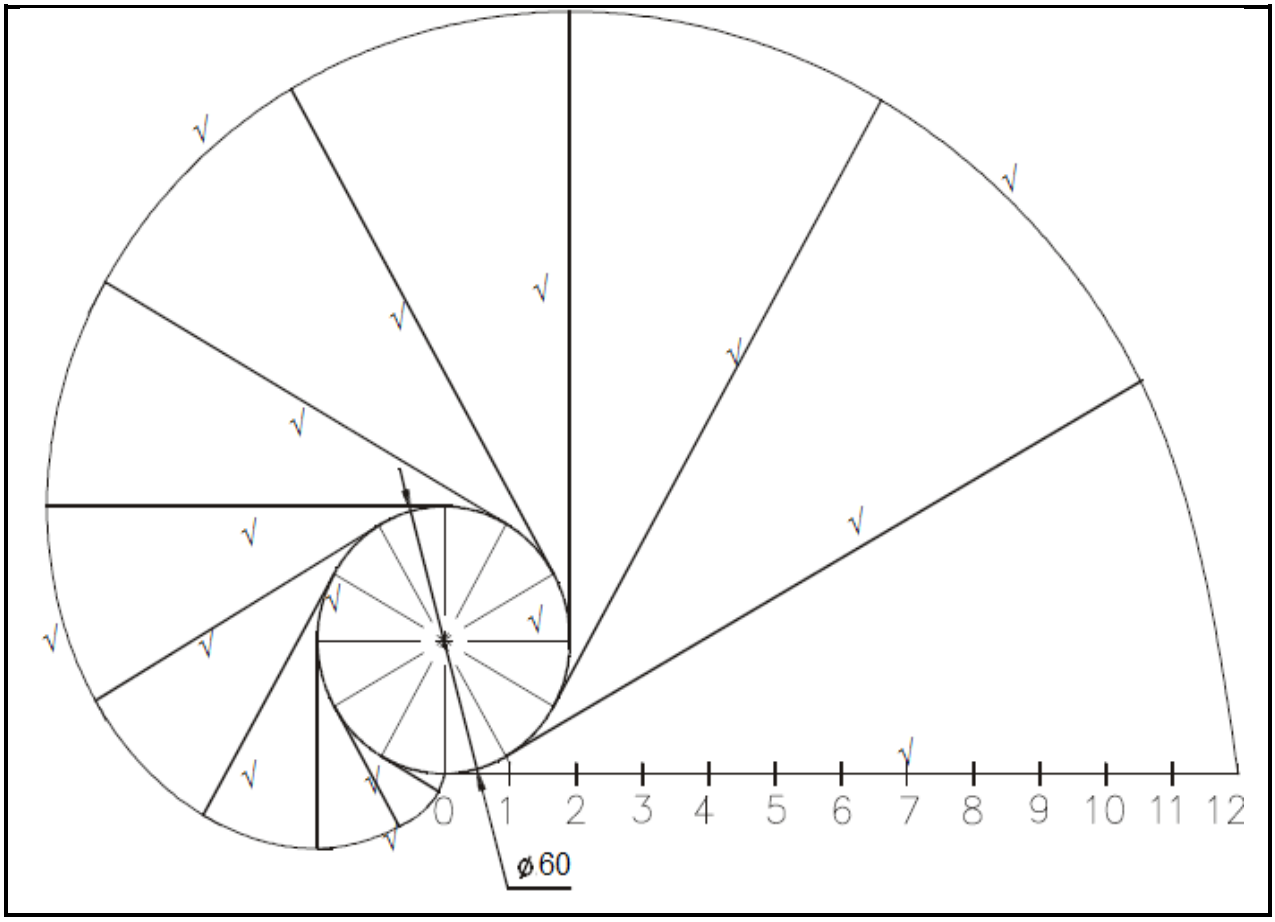

FIGURE 3

MARK ALLOCATION

CORRECTNESS	8%
CONSTRUCTION	2%
ANY APPROPRIATE SCALE	2%
LINE WORK	2%
LAYOUT AND NEATNESS	1%
TOTAL	15%

[15]

QUESTION 5: ORTHOGRAPHIC PROJECTION

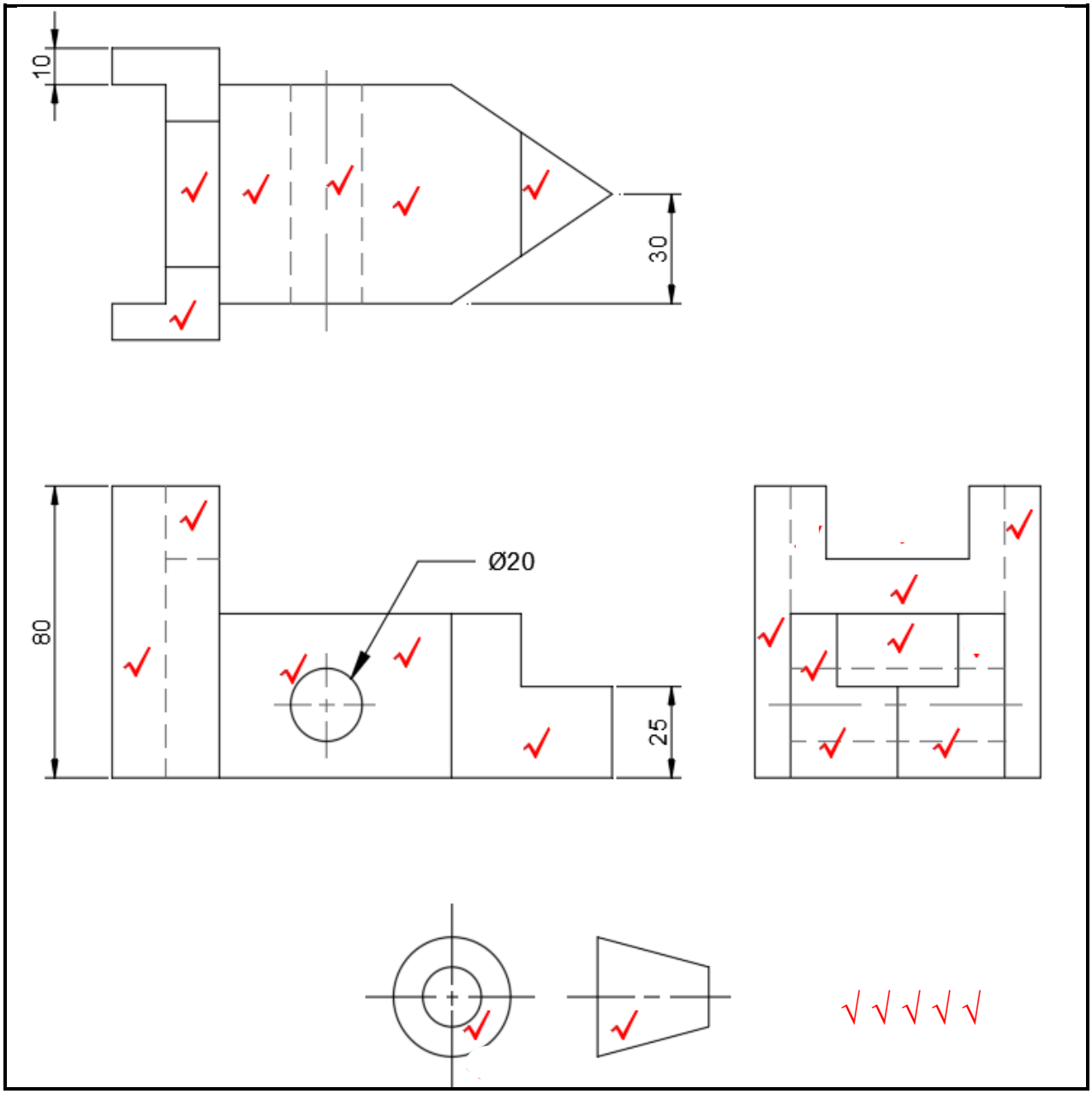

FIGURE 4

MARK ALLOCATION

	FV	RV	TV
CORRECTNESS	3	5	4
ACCURACY	1	1	1
LINE WORK AND NEATNESS	1	1	1
TOTAL	5%	7%	6%
PROJECTION SYMBOL	2%		
ANY FIVE DIMENSIONS	5%		
	25%		

[25]

QUESTION 6: PICTORIAL DRAWING

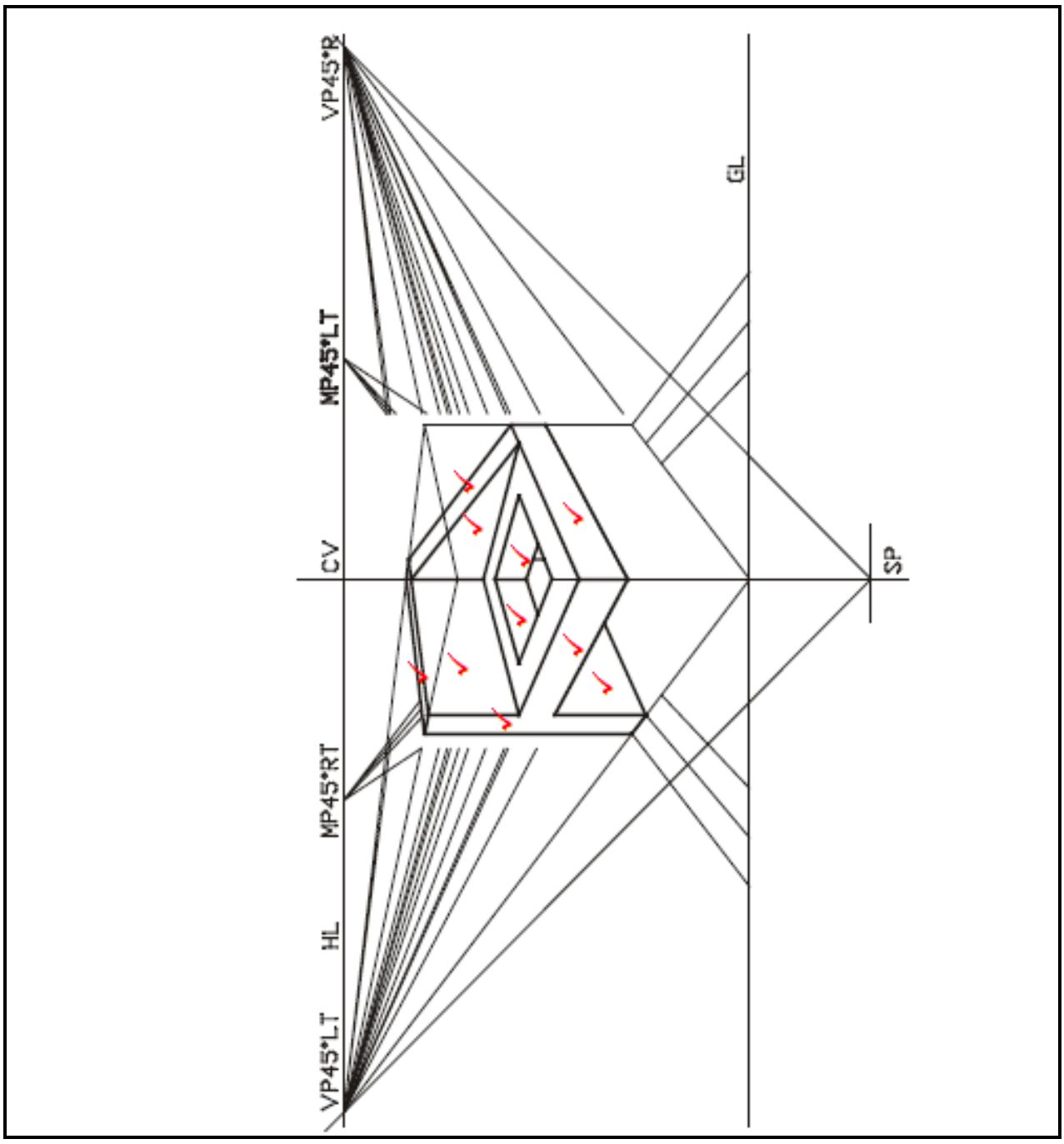

FIGURE 5

MARK ALLOCATION

CORRECTNESS	10%
ACCURACY	3%
CONSTRUCTION	3%
LINE WORK	2%
LAYOUT AND NEATNESS	2%
TOTAL	20%

[20]

TOTAL: 100

Copyright reserved