higher education & training

Department:
Higher Education and Training
REPUBLIC OF SOUTH AFRICA

NATIONAL CERTIFICATE (VOCATIONAL)

ENGINEERING GRAPHICS AND TECHNOLOGY
NQF LEVEL 2

(12050682)

10 November 2022 (Y-paper)
13:00–17:00

REQUIREMENTS: A2 drawing sheets and drawing instruments

This question paper consists of 6 pages.

227Q1N2210

Copyright reserved

TIME: 4 HOURS
MARKS: 100

INSTRUCTIONS AND INFORMATION

1. Answer all the questions.
2. Read all the questions carefully.
3. Number the answers according to the numbering system used in this question paper.
4. Use both sides of the drawing sheet.
5. A 15-mm border must be drawn on both sides of the drawing sheet.
6. All drawing work, including the candidate's information, must be done in pencil.
7. All the abbreviations and symbols must comply with the latest SABS 0111 Code of Practice for Engineering Drawing.
8. Write neatly and legibly.

Copyright reserved

QUESTION 1

Indicate whether the following statements are TRUE or FALSE by writing only 'True' or 'False' next to the question number (1.1–1.5) in the ANSWER BOOK.

1.1 Set squares are used together with a T-square to draw vertical or inclined lines at various angles.

1.2 A duster is used to keep the dust off all instruments as well as to wipe the surfaces of the drawing board.

1.3 A scale rule is used for all circles and arcs on a drawing.

1.4 An eraser is used to delete mistakes and changes on a pencil drawing.

1.5 Masking tape is used to fix the drawing sheet to the surface of the drawing board.

(5 × 1) **[5]**

QUESTION 2

FIGURE 1 shows a view of a G-clamp.

Use a pencil and an eraser and draw the view of the clamp in good proportions, approximately the given size.

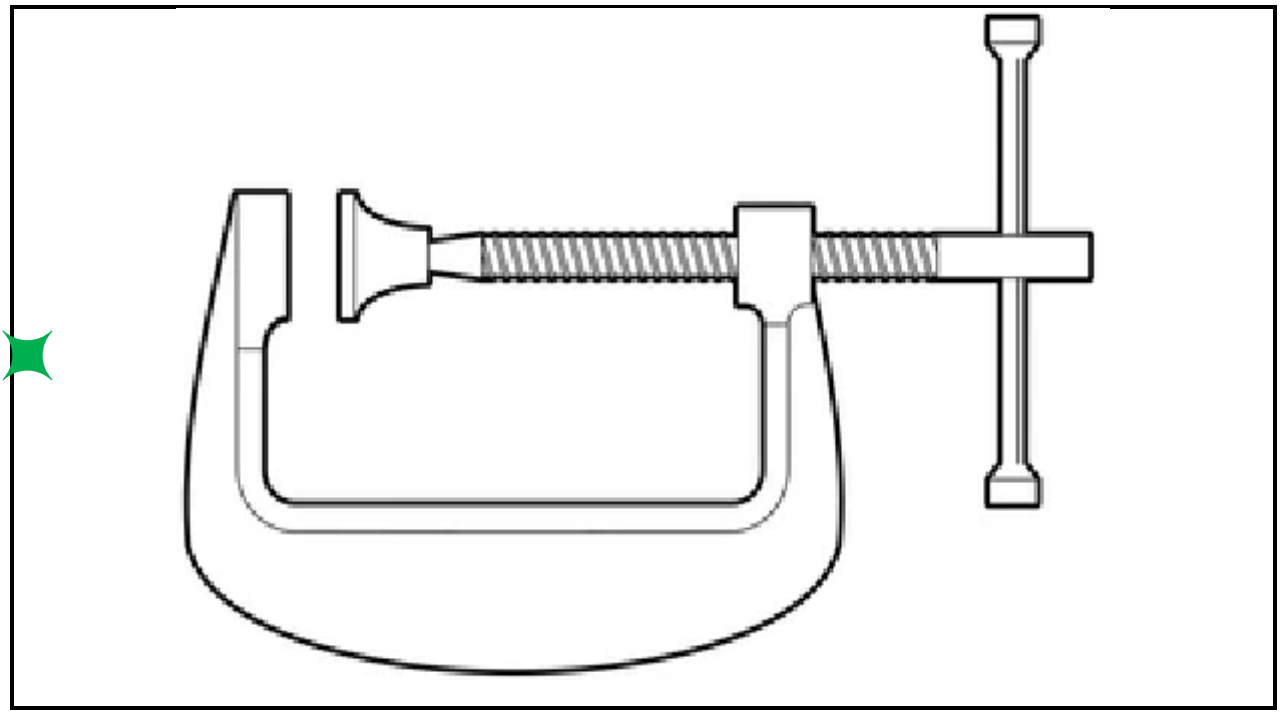

FIGURE 1

[15]

QUESTION 3

Draw the view, to scale 1:1, of the spanner shown in FIGURE 2. Show all the construction of the arcs and insert any THREE dimensions. Use only a clutch pencil and a spring bow compass.

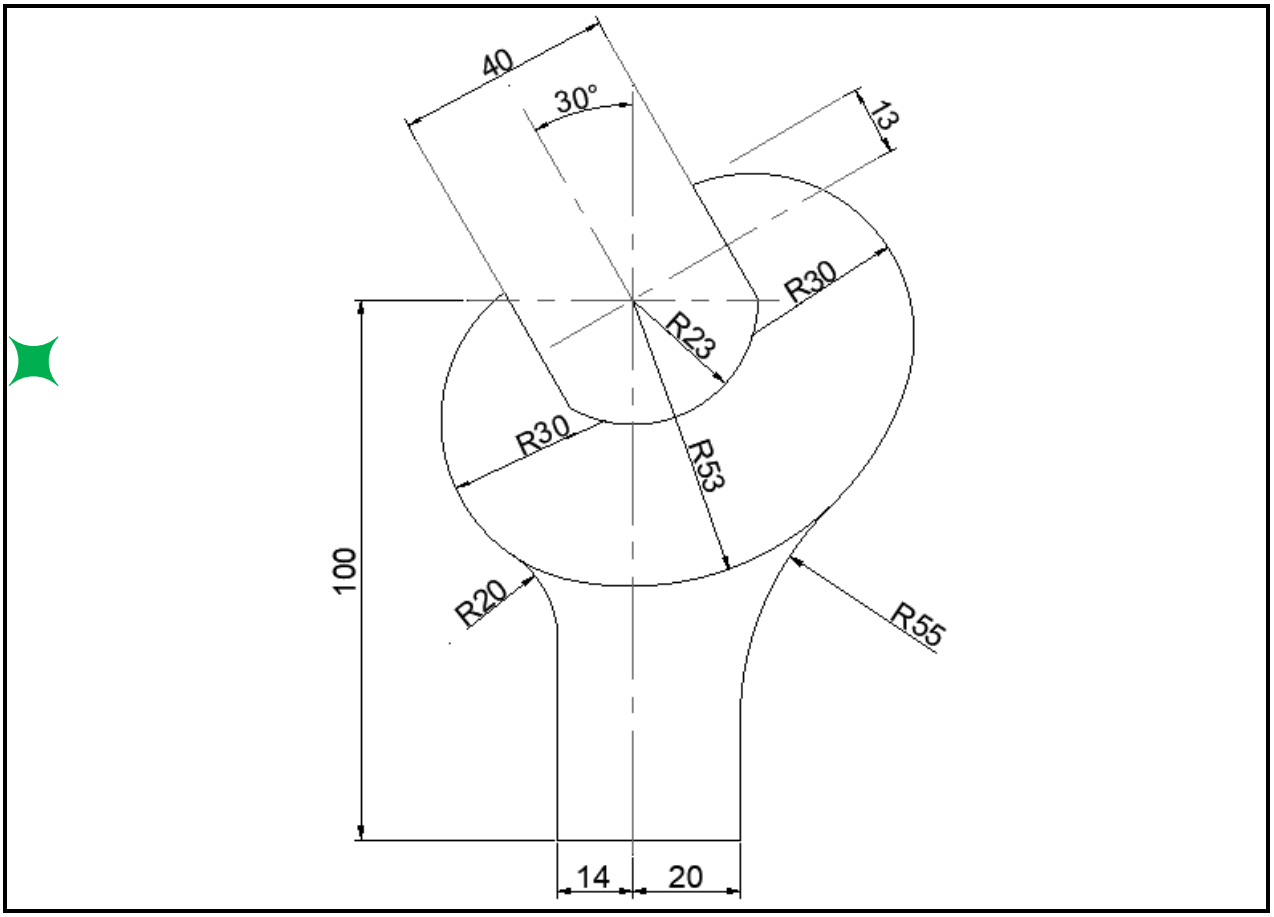

FIGURE 2

[20]

QUESTION 4

Construct the involute of a triangle with sides of 35 mm and show all the geometrical construction lines and numbering (use any appropriate scale). **[15]**

Copyright reserved

QUESTION 5

FIGURE 3 below shows an isometric view of a casting. DO NOT draw the given view, but draw, to scale 1:1 and in first-angle orthographic projection, the following views of the casting:

5.1 The front view as seen in the direction of arrow **F** (5)

5.2 The left view as seen in the direction of arrow **L** (5)

5.3 The top view as seen in the direction of arrow **T** (6)

5.4 Draw the symbol for first-angle orthographic projection beneath the layout. (2)

5.5 Add the following title and scale beneath the layout:

CASTING
SCALE: 1:1 (2)

5.6 Add any FIVE dimensions. (5)

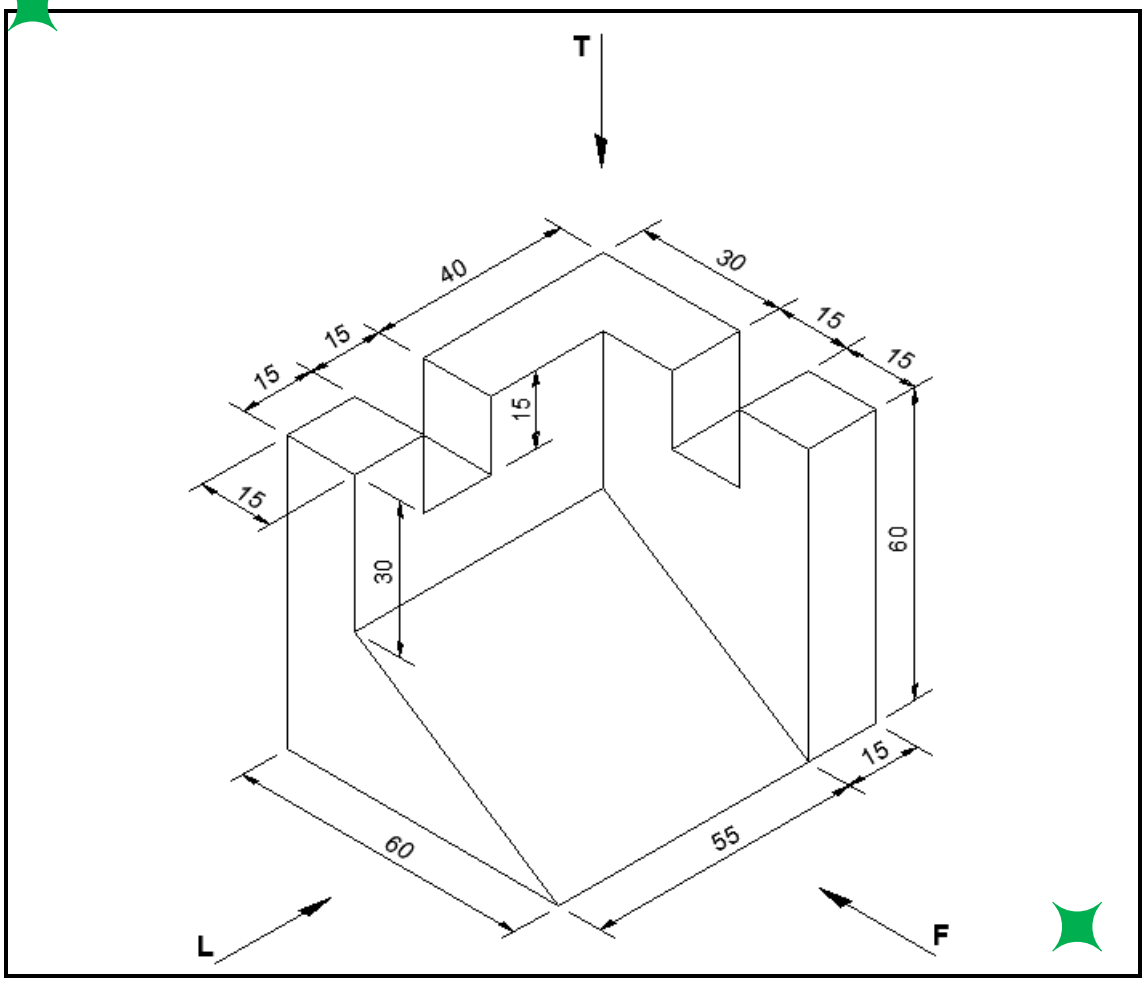

FIGURE 3

[25]

QUESTION 6

FIGURE 4 shows two views of a block in first-angle orthographic projection. DO NOT draw the given view, but draw, to scale 1:1, an oblique projection of the block using the cavalier method at an angle of 45°. Do not insert any dimensions.

No hidden details are required.

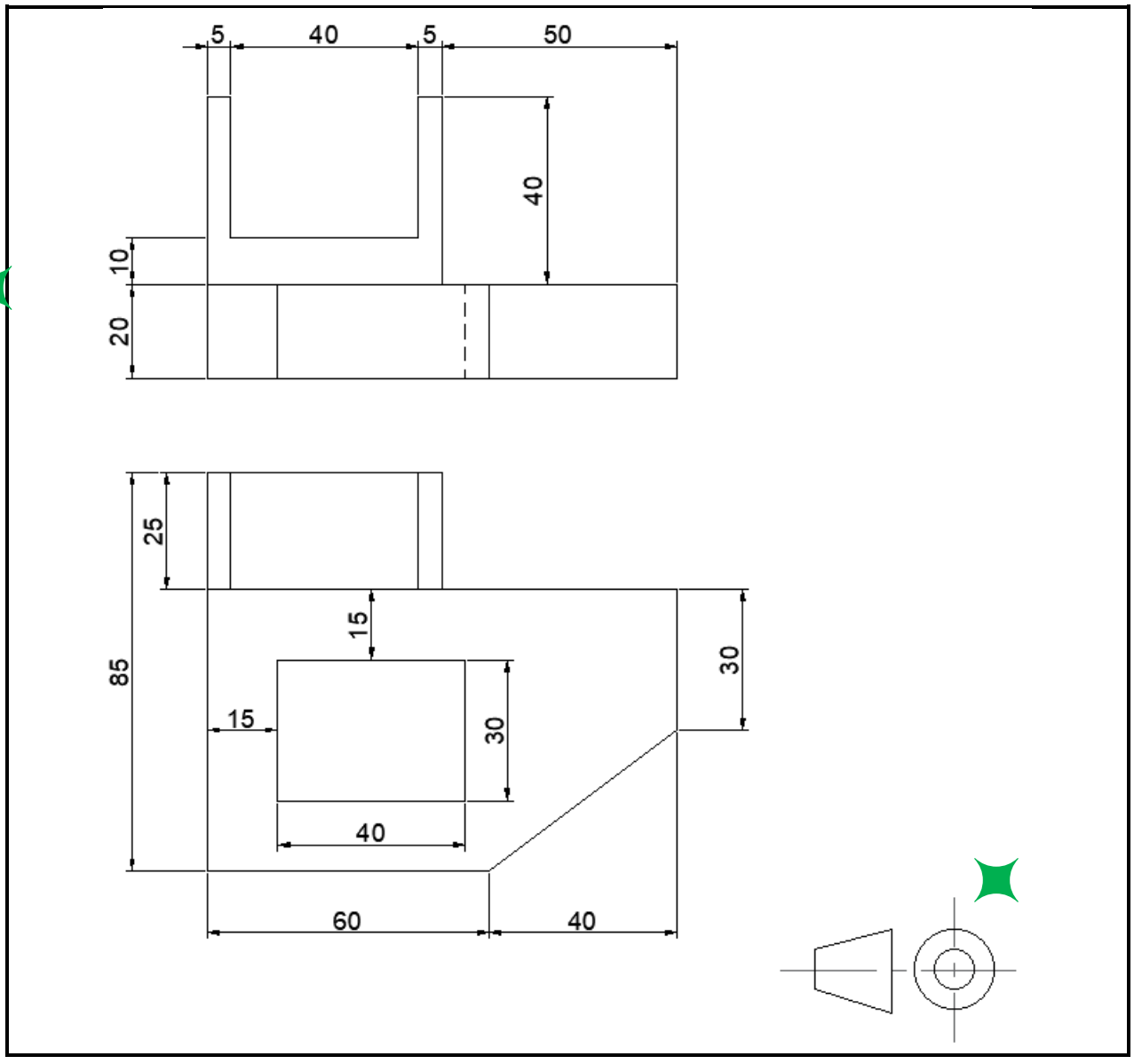

FIGURE 4

[20]

TOTAL: 100

Copyright reserved