higher education & training

Department:
Higher Education and Training
REPUBLIC OF SOUTH AFRICA

MARKING GUIDELINE

NATIONAL CERTIFICATE (VOCATIONAL)

ENGINEERING GRAPHICS AND TECHNOLOGY
NQF LEVEL 2

10 NOVEMBER 2022

This marking guideline consists of 6 pages.

Copyright reserved

QUESTION 1

1.1 True
1.2 True
1.3 False
1.4 True
1.5 True

(5 × 1) **[5]**

QUESTION 2

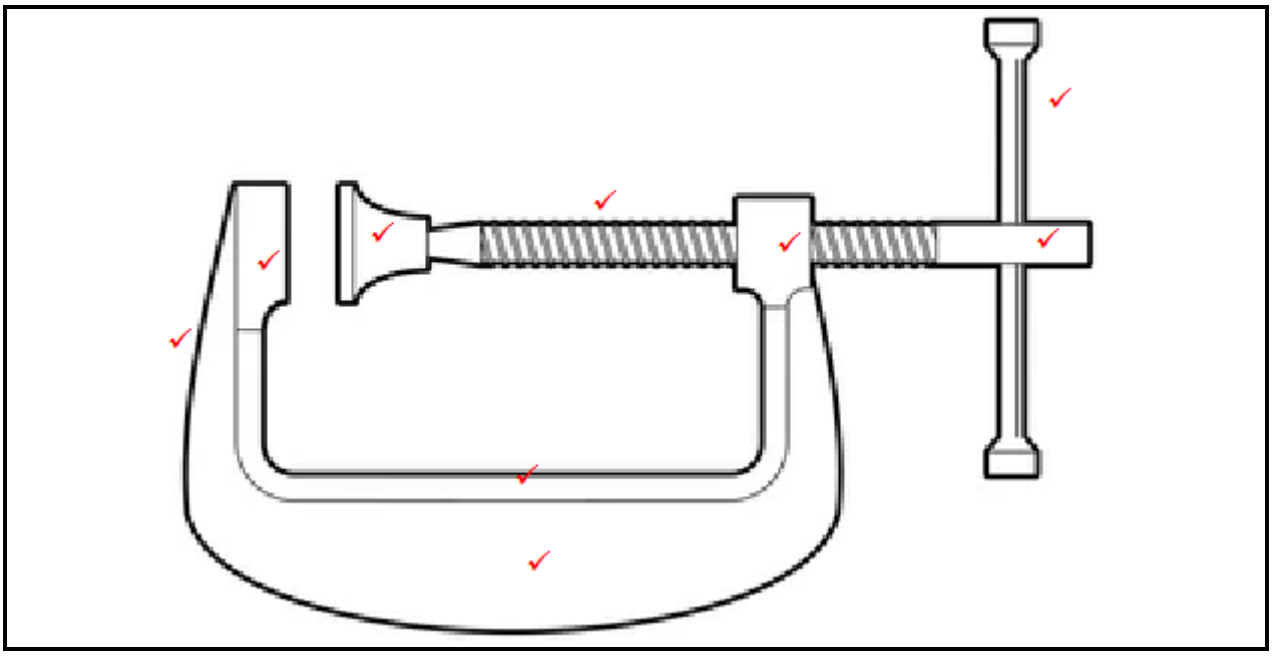

CORRECTNESS	9
ACCURACY	2
LINEWORK	2
LAYOUT AND NEATNESS	2
TOTAL	**15**

[15]

Copyright reserved

QUESTION 3

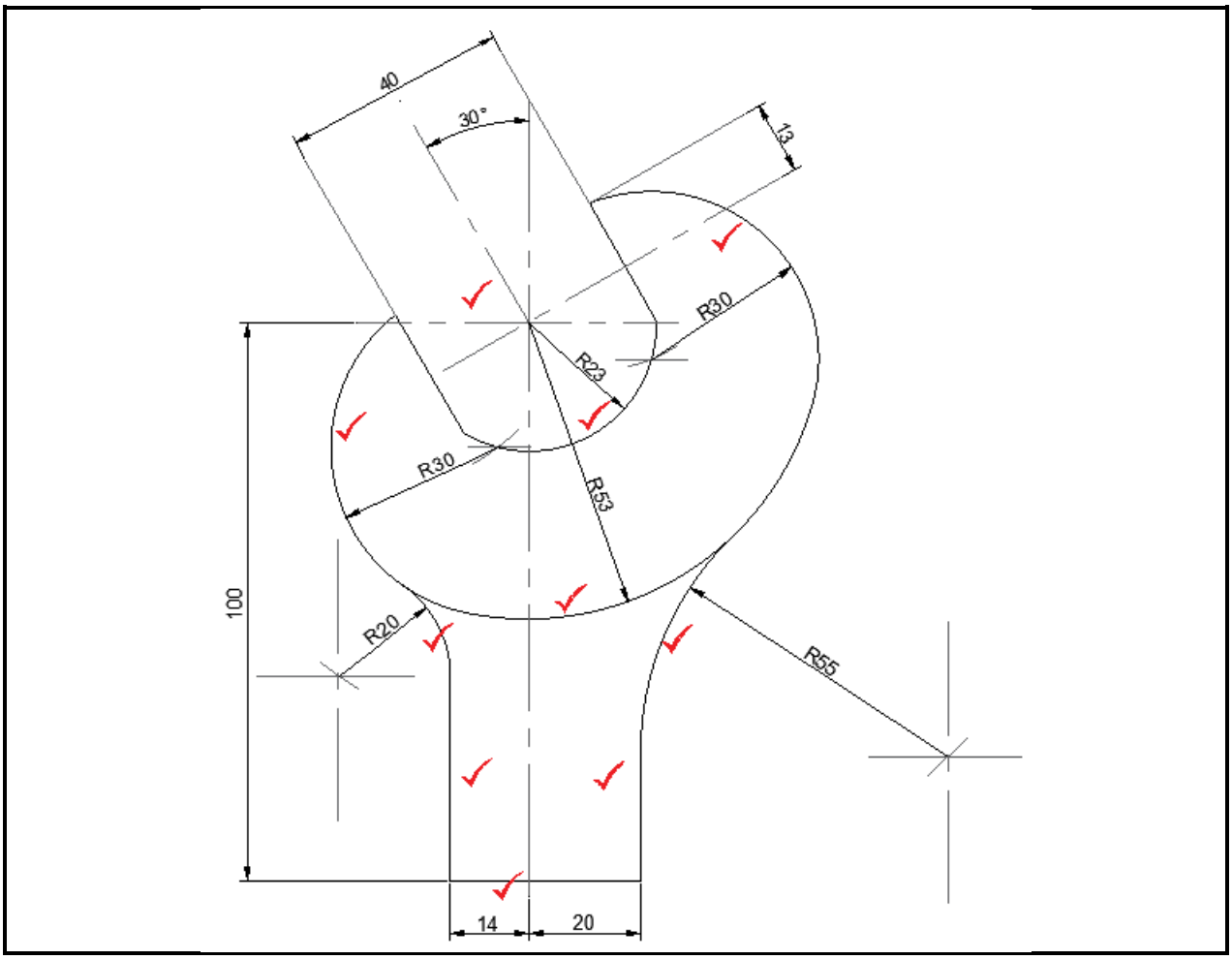

CORRECTNESS	10
CONSTRUCTION LINES	3
ACCURACY	2
LINEWORK	1
LAYOUT AND NEATNESS	1
ANY THREE DIMENSIONS	3
TOTAL	**20**

[20]

QUESTION 4

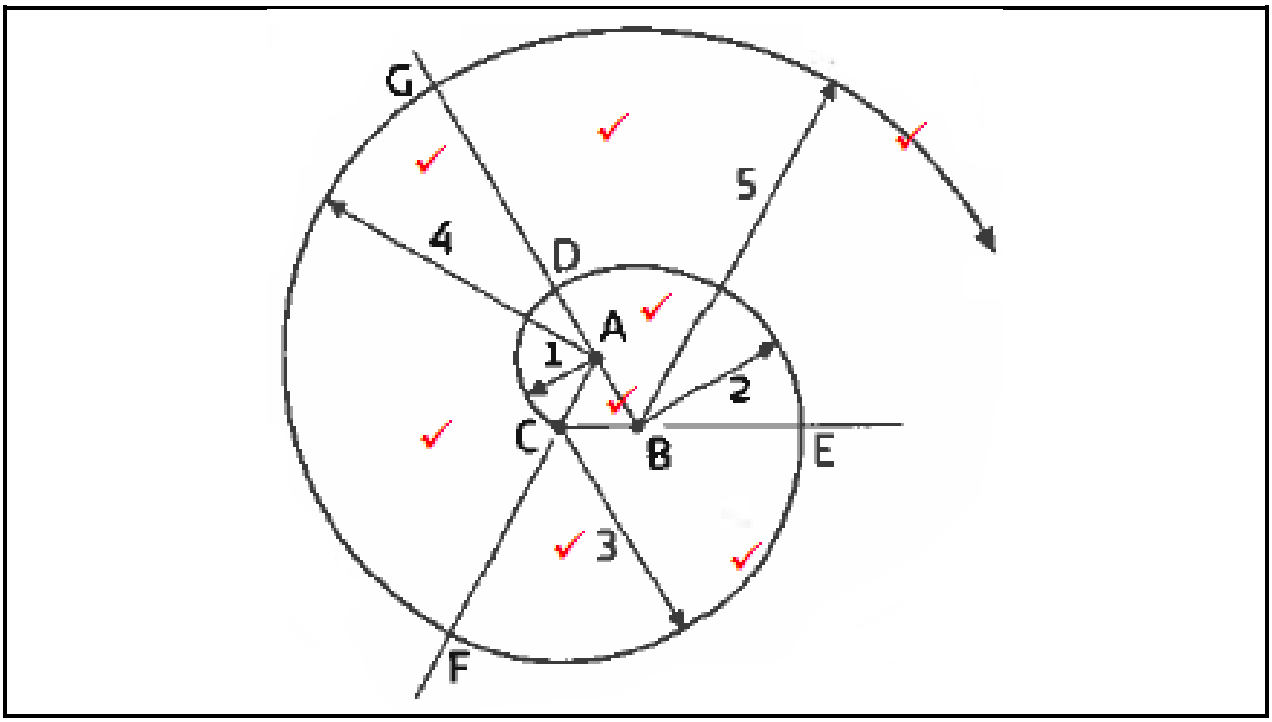

CORRECTNESS	8
CONSTRUCTION	2
ANY APPROPRIATE SCALE	2
LINEWORK	2
LAYOUT AND NEATNESS	1
TOTAL	**15**

[15]

QUESTION 5

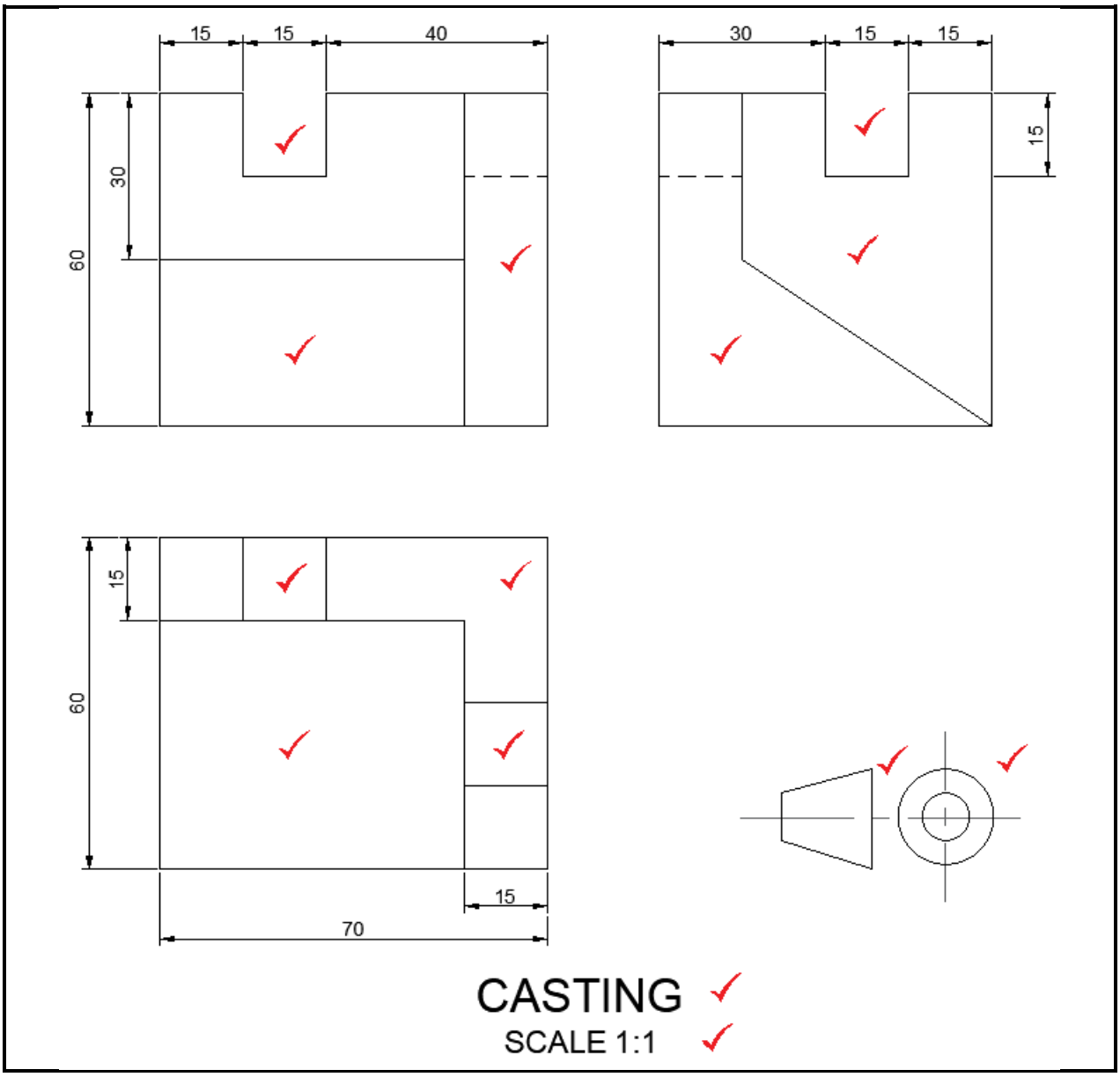

	FV	LV	TV
CORRECTNESS	3	3	4
ACCURACY	1	1	1
LINEWORK AND NEATNESS	1	1	1
PROJECTION SYMBOL	2		
TITLE AND SCALE	2		
ANY FIVE DIMENSIONS	5		
TOTAL	**25**		

[25]

QUESTION 6

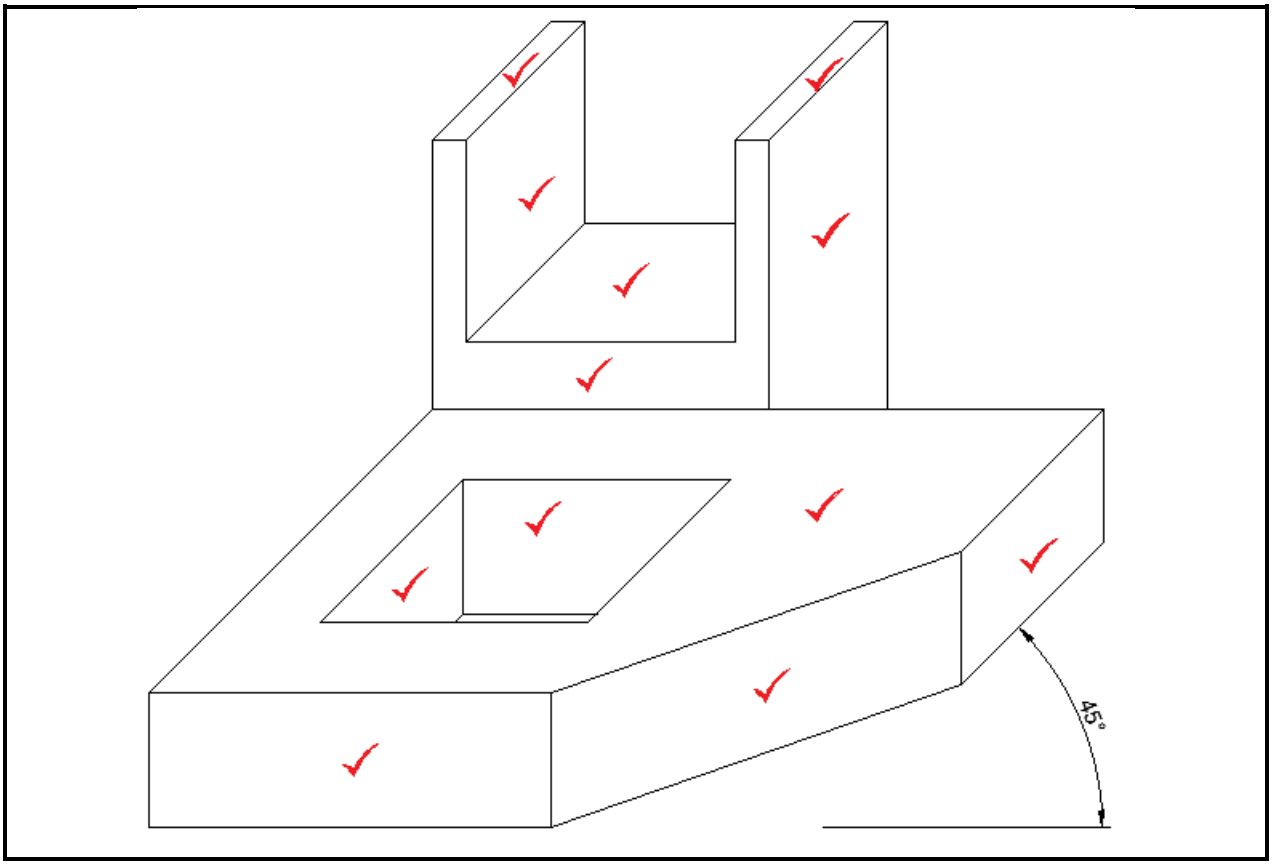

CORRECTNESS	12
ACCURACY AND SCALE	3
CORRECT ANGLE OF OBLIQUE (SLOPING) LINES	1
LINEWORK	2
LAYOUT AND NEATNESS	2
TOTAL	**20**

[20]

TOTAL: 100

Copyright reserved