higher education & training

Department:
Higher Education and Training
REPUBLIC OF SOUTH AFRICA

NATIONAL CERTIFICATE (VOCATIONAL)

ENGINEERING FABRICATION

(Second paper)

NQF LEVEL 2

(6031002)

22 November 2022 (Y-paper)
13:00–16:00

REQUIREMENTS: One A2 drawing sheet

Calculators may be used.

This question paper consists of 5 pages.

553Q2N2222

Copyright reserved

TIME: 3 HOURS
MARKS: 75

INSTRUCTIONS AND INFORMATION

1. Answer all the questions.
2. Read all the questions carefully.
3. Number the answers according to the numbering system used in this question paper.
4. Answer TWO questions on one side of the drawing paper and the third on the reverse side.
5. Use only pencil for drawings and a black pen for ID numbers.
6. Start each question on a new page.
7. Write neatly and legibly.

Copyright reserved

QUESTION 1

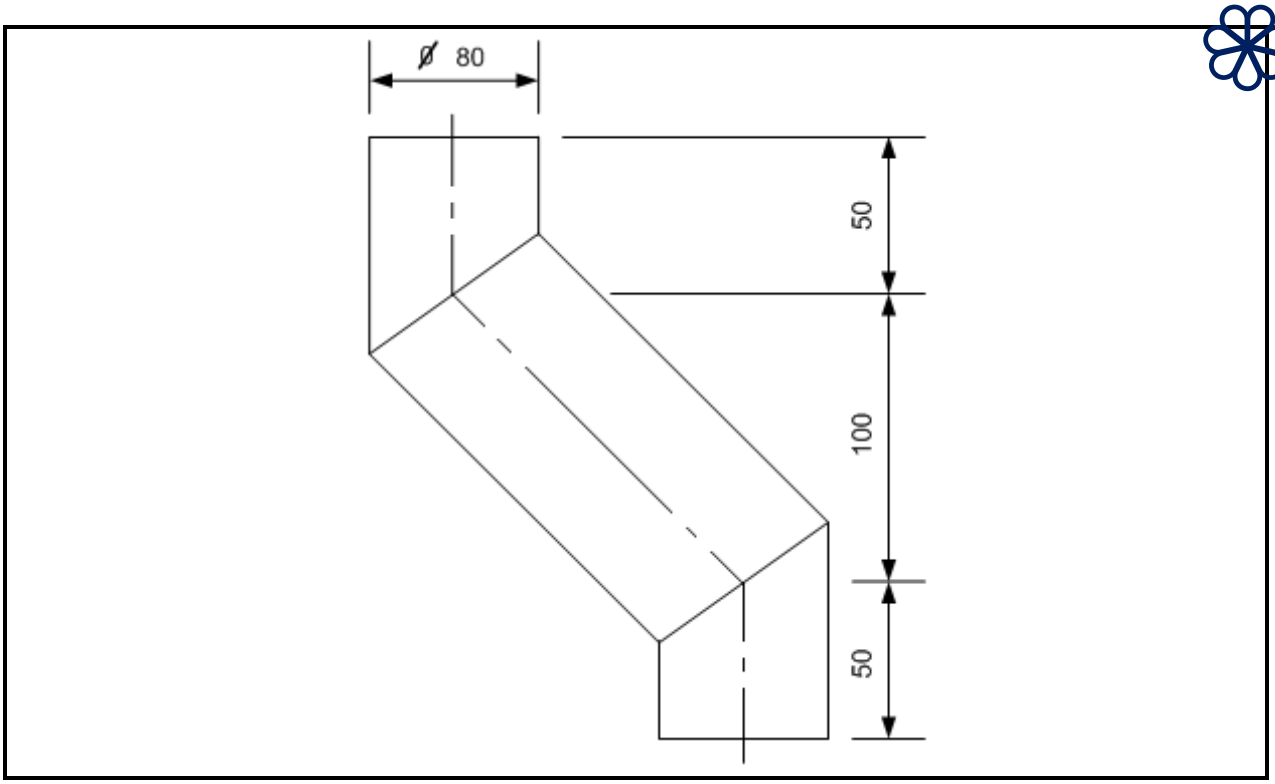

FIGURE 1

1.1 Draw the given view to scale 1:2. (4)

1.2 Using the parallel line method, develop the pattern of the oblique pipe. (14)

Mark allocation for drawing practice:

Accuracy	Neatness	Line work	Title and scale
3	1	2	1

(7)

NOTE: Open developments on the shorter side.

[25]

QUESTION 2

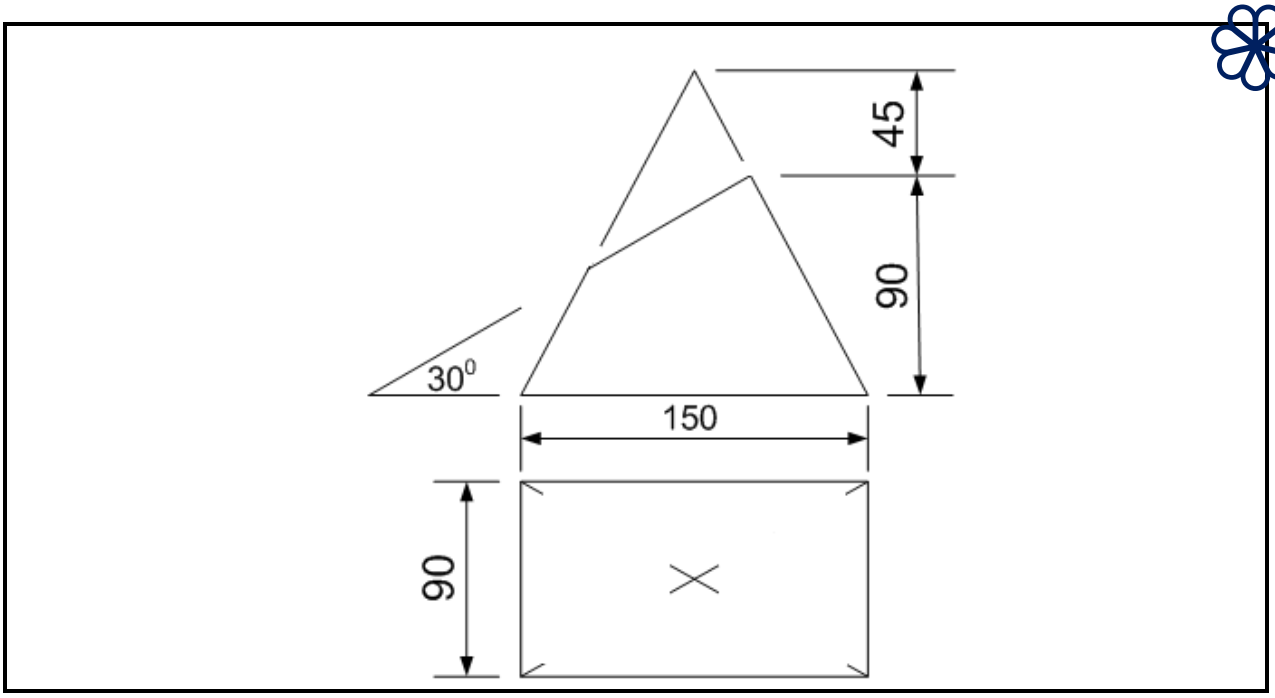

FIGURE 2

2.1 Draw the given view to scale 1:2. (4)

2.2 Using the radial line method, develop the pattern of the pyramid. (14)

Mark allocation for drawing practice:

Accuracy	Neatness	Line work	Title and scale
3	1	2	1

(7)

NOTE: Open development on the shorter side.

[25]

QUESTION 3

FIGURE 3 below shows two views of a round-to-square transition piece.

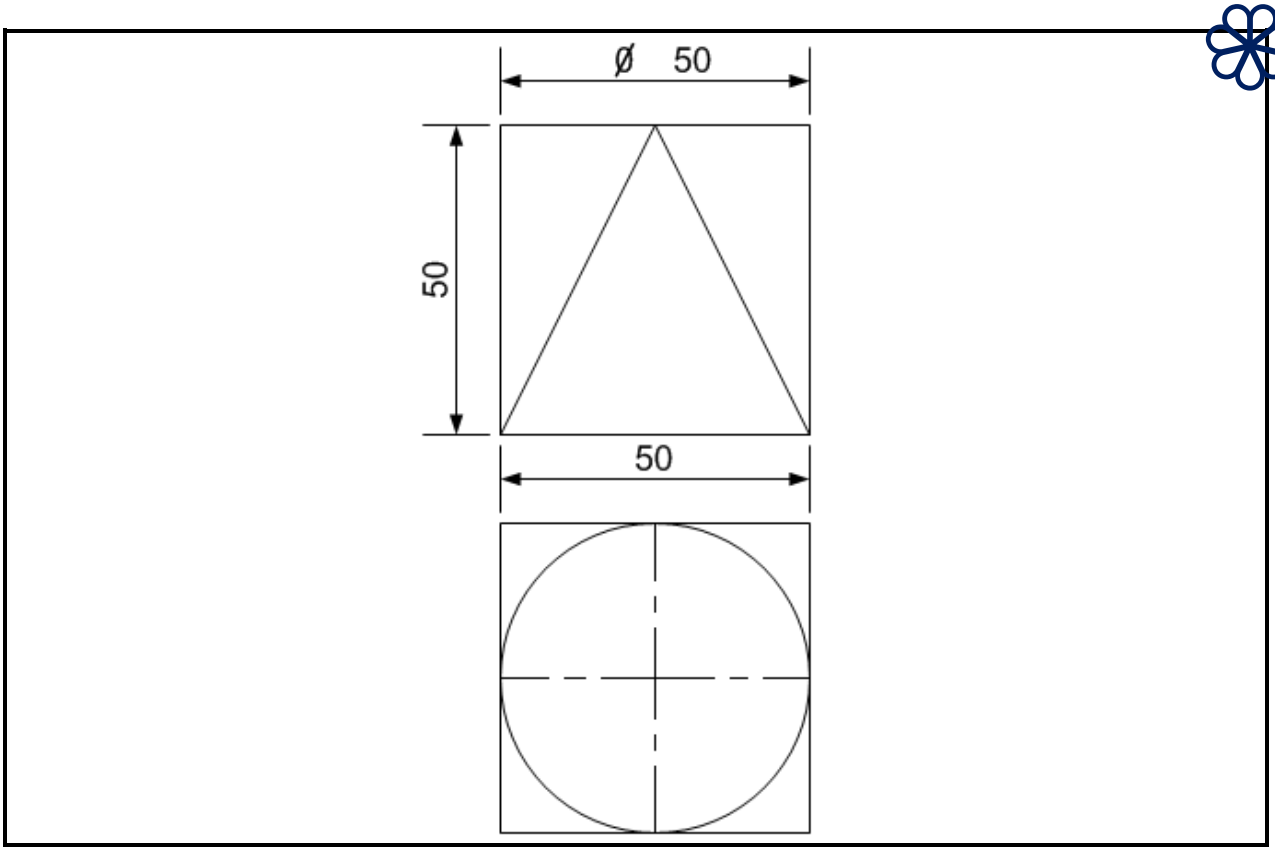

FIGURE 3

3.1 Draw the given view to scale 1:1. (5)

3.2 Using the triangulation method, develop the pattern of the round-to-square transition piece. (13)

Mark allocation for drawing practice:

Accuracy	Neatness	Line work	Title and scale
3	1	2	1

(7)

NOTE: Open development on the centre line.

[25]

TOTAL: 75

Copyright reserved