higher education & training

Department:
Higher Education and Training
REPUBLIC OF SOUTH AFRICA

MARKING GUIDELINE

NATIONAL CERTIFICATE (VOCATIONAL)

ENGINEERING FABRICATION
(Second paper)
NQF LEVEL 2

22 November 2022

This marking guideline consists of 4 pages.

Copyright reserved

QUESTION 1

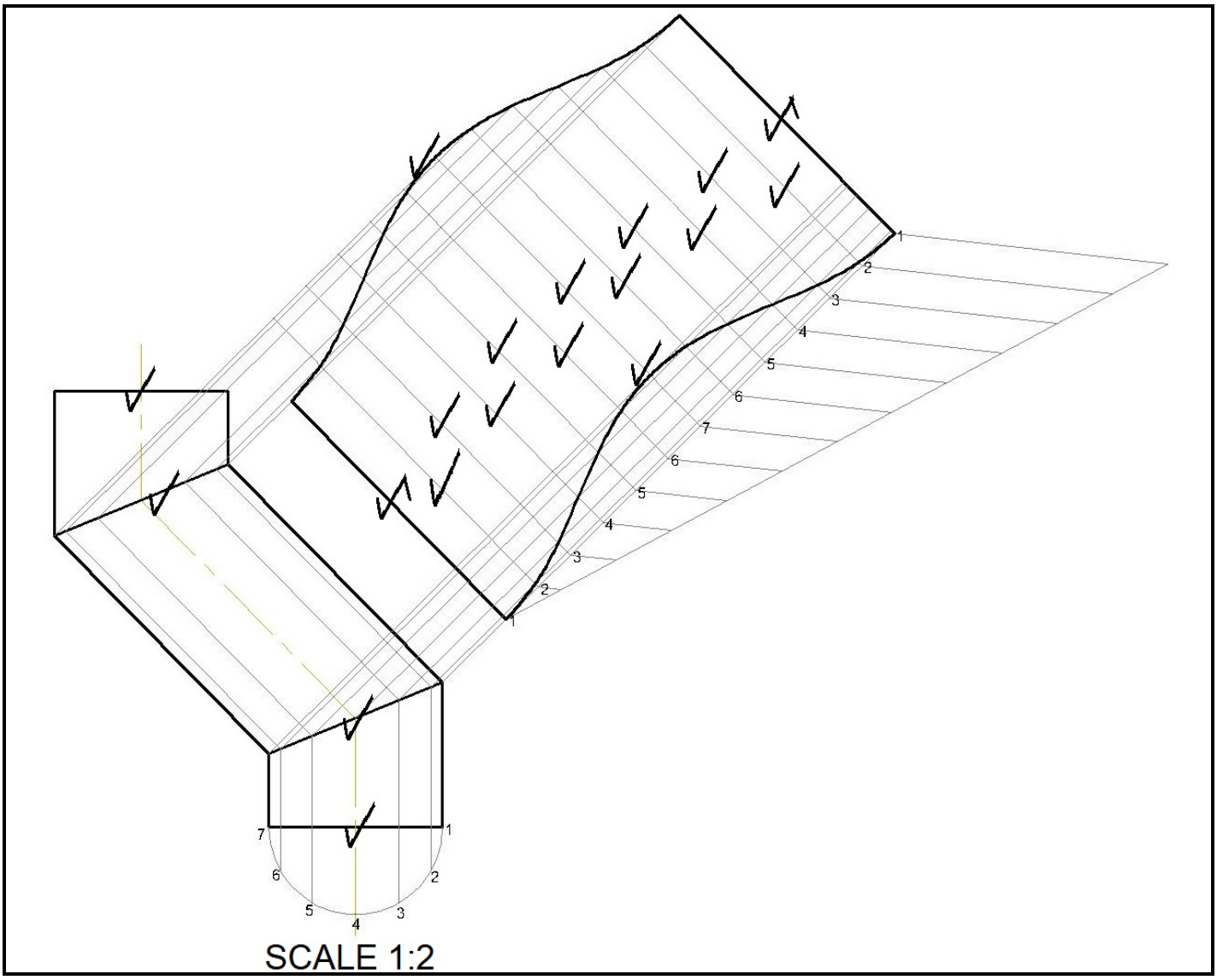

PARALLEL LINE METHOD

Given view	4
Development	14
Accuracy	3
Neatness	1
Line work	2
Scale	1
TOTAL	**25**

Copyright reserved

QUESTION 2

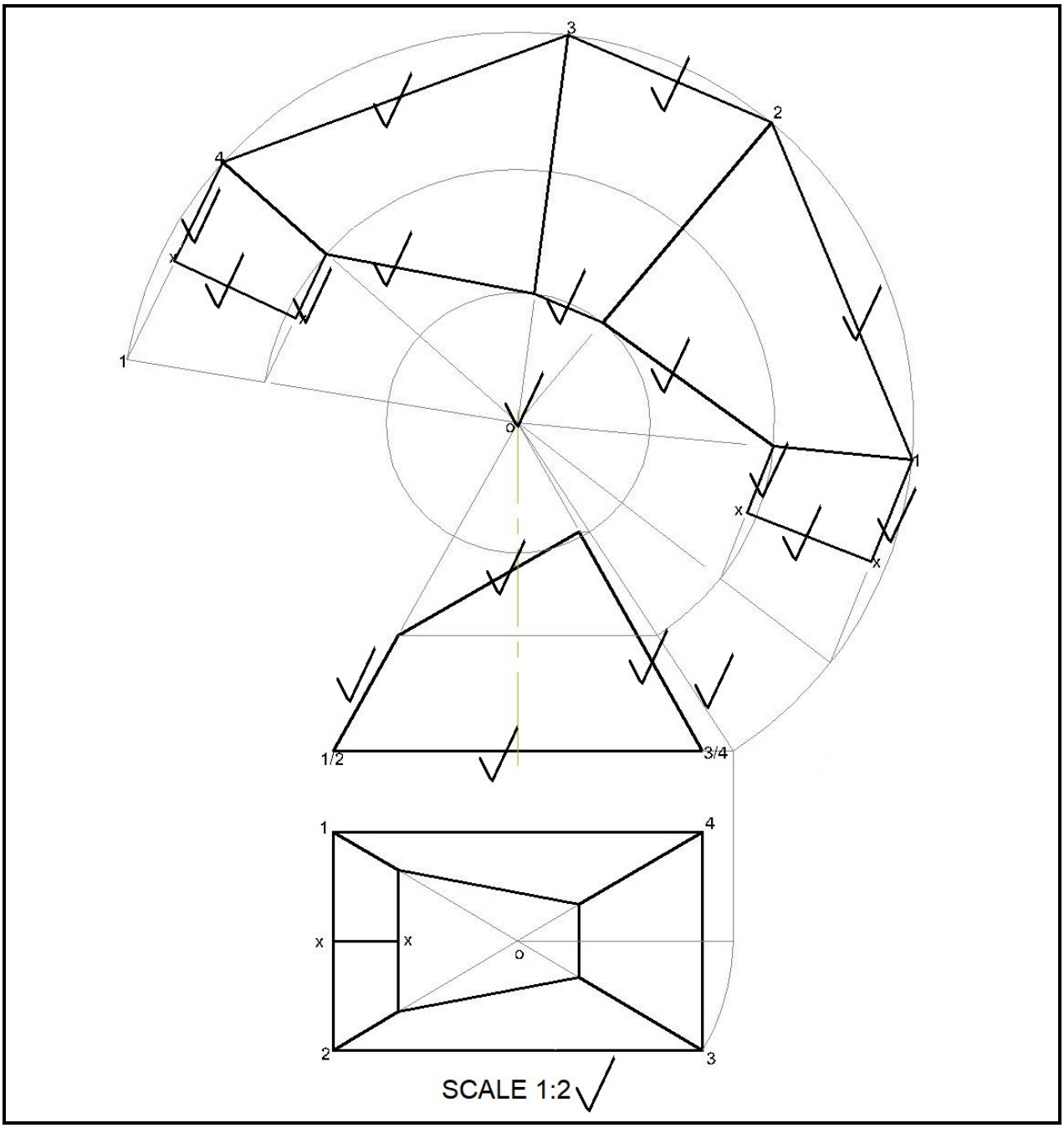

RADIAL LINE METHOD

Given view	4
Development	14
Accuracy	3
Neatness	1
Line work	2
Scale	1
TOTAL	**25**

Copyright reserved

QUESTION 3

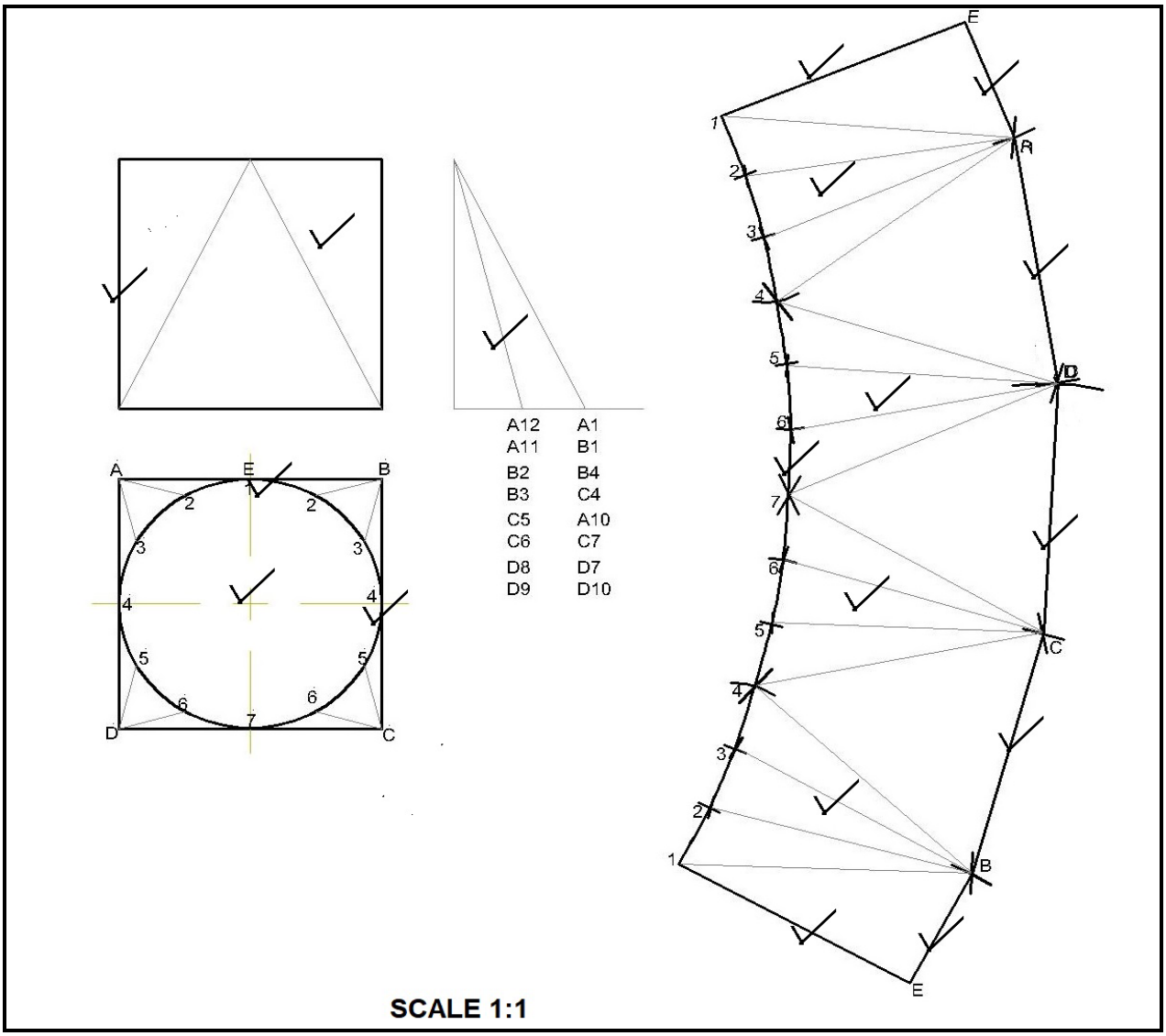

TRIANGULATION

Given view	5
Development	13
Accuracy	3
Neatness	1
Line work	2
Scale	1
TOTAL	**25**

TOTAL: 75

Copyright reserved