higher education & training

Department:
Higher Education and Training
REPUBLIC OF SOUTH AFRICA

NATIONAL CERTIFICATE (VOCATIONAL)

ELECTROTECHNOLOGY
NQF LEVEL 2

(12040212)

21 November 2023 (Y-paper)
13:00–16:00

Nonprogrammable calculators may be used.

This question paper consists of 8 pages and a formula sheet.

Copyright reserved

DEPARTMENT OF HIGHER EDUCATION AND TRAINING
REPUBLIC OF SOUTH AFRICA

NATIONAL CERTIFICATE (VOCATIONAL)
ELECTROTECHNOLOGY
NQF LEVEL 2
TIME: 3 HOURS
MARKS: 100

INSTRUCTIONS AND INFORMATION

1. Answer all the questions.
2. Read all the questions carefully.
3. Number the answers according to the numbering system used in this question paper.
4. Start each section on a new page.
5. Use only black or blue pen.
6. Write neatly and legibly.

Copyright reserved

QUESTION 1

1.1 Indicate whether the following statements are TRUE or FALSE. Choose the answer and write only 'True' or 'False' next to the question number (1.1.1–1.1.5) in the ANSWER BOOK.

1.1.1 Insulators are materials that allows the movement of electrons from one atom to another. Insulators are also able to carry electricity easily.

1.1.2 Electrons have a positive charge whereas protons have a negative charge.

1.1.3 Resistors connected in parallel in a circuit will decrease the total resistance of a circuit.

1.1.4 Capacitors connected in series in a circuit will increase the total capacitance of a circuit.

1.1.5 An oscilloscope gives a visual depiction (or representation) of a waveform.

(5 × 1) (5)

1.2 Define *Ohm's law*. (3)

1.3 Study FIGURE 1 below and calculate the following:

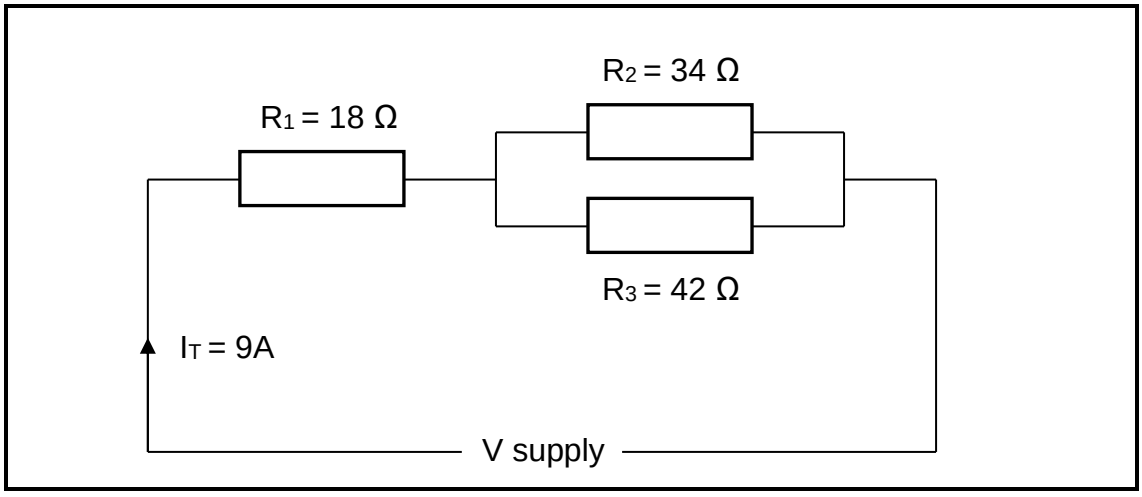

FIGURE 1

1.3.1 Resistance across the parallel section. (3)

1.3.2 Total resistance of the circuit. (2)

1.3.3 Voltage drop across the parallel section. (2)

1.3.4 Current flowing through R_2 resistor. (2)

1.4 A transformer with 150 turns on the primary winding and 15 turns on the secondary winding draws a current of 0,2 A from a 220 V supply.

Calculate the secondary current. (3)

[20]

QUESTION 2

2.1 Refer to FIGURE 2 below and answer the questions that follow:

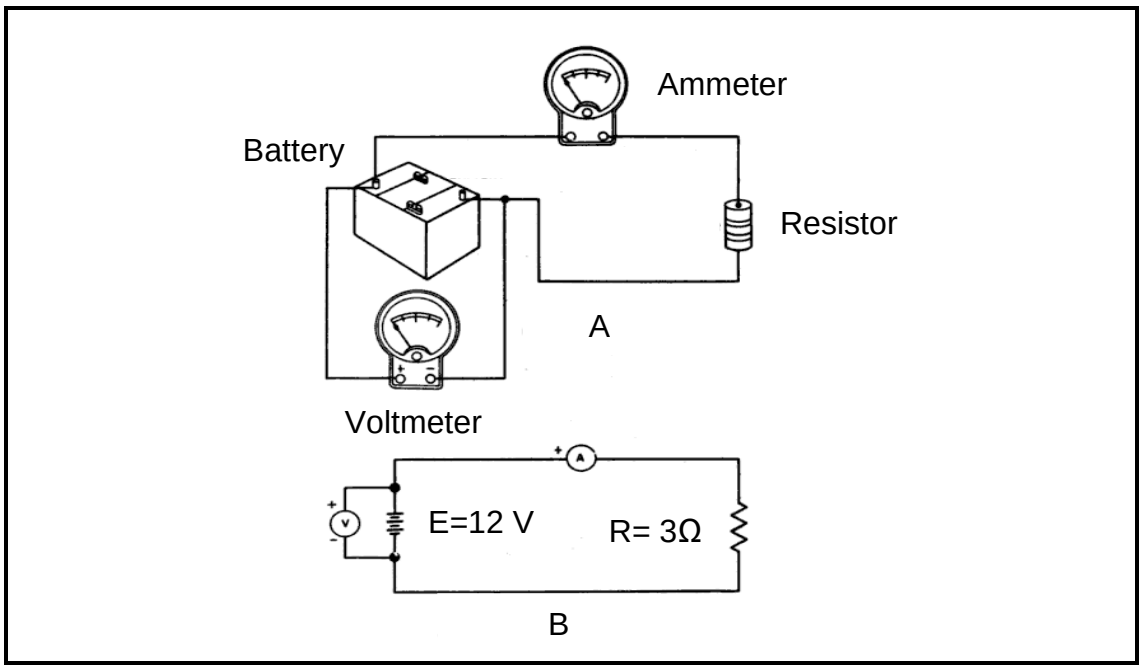

FIGURE 2

2.1.1 Name the type of electrical drawing used in circuits A and B respectively.

2.1.2 What will the reading on the ammeter be? Show the reading by means of calculation.

2.1.3 Calculate the power drawn by the load.

(3 × 2) (6)

2.2 Make a neat, labelled sketch to show how two luminaires are controlled from own switch. (3)

2.3 An electric cable has the purpose of transporting electrical energy from one point to another.

Name FOUR types of cables normally used in a domestic installation. (4)

2.4 List any FOUR tools you will need to make a married joint. (4)

2.5 Briefly explain the principle of operation of a load control relay. (3)

2.6 List FIVE safety precautions to consider when working with a hacksaw. (5)
[25]

QUESTION 3

3.1 To work systematically when constructing a circuit or a project, you need to draw up a work plan and compile a materials list.

Choose a description from COLUMN B that matches the steps in COLUMN A. Write only the letter (A–F) next to the question number (3.1.1–3.1.6) in the ANSWER BOOK.

COLUMN A		COLUMN B	
3.1.1	Step 1	A	Use either a printed circuit board or Vero board to build the final project
3.1.2	Step 2	B	Set out all components on the work bench with the diagram
3.1.3	Step 3		
3.1.4	Step 4	C	Purchase all components needed
3.1.5	Step 5	D	Draw a circuit diagram of the project or the idea
3.1.6	Step 6	E	Check and test the circuit
		F	Build a prototype on a breadboard and test the circuit

(6 × 1) (6)

3.2 In the workshop, we need tools and equipment to build, repair and test circuits.

Briefly describe the function of the following components, tools and equipment:

3.2.1 Wire stripper

3.2.2 Soldering iron

3.2.3 Solder pump

3.2.4 Long-nose pliers

3.2.5 Oscilloscope

3.2.6 Multimeter

(6 × 1) (6)

3.3 FIGURE 3 below shows a block diagram of a regulated power supply.

You are expected to measure the voltages at points (A–E). State the voltage type (AC or DC) at each point.

Indicate whether the AC voltages are high or low voltages.

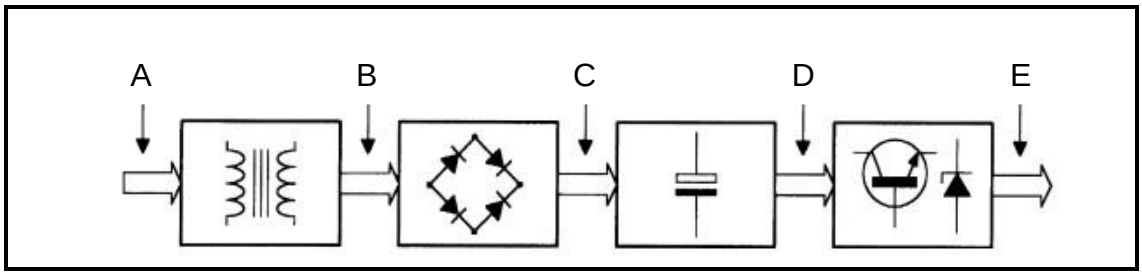

FIGURE 3

(5 × 1) (5)

3.4 State when the following boards are used in electronic circuits:

3.4.1 Breadboard

3.4.2 Vero board

(2 × 1) (2)

3.5 Complete TABLE 1 below by indicating possible resistance readings that will be obtained when testing a N-P-N transistor with a digital multimeter.

Write the correct answer next to the question number (3.5.1–3.5.6) in the ANSWER BOOK.

+ Connection	**- Connection**	**Resistance results**
Base	Emitter	(3.5.1) …
Emitter	Base	(3.5.2) …
Base	Collector	(3.5.3) …
Collector	Base	(3.5.4) …
Emitter	Collector	(3.5.5) …
Collector	Emitter	(3.5.6) …

TABLE 1

(6 × 1) (6)

[25]

QUESTION 4

4.1 Analyse the circuit in FIGURE 4 below and work out the current for each of the voltages. Write your answer next to the question number (4.1.1–4.1.5) in the ANSWER SHEET.

Voltage V	1 V	2 V	3 V	4 V	5 V
Current A	(4.1.1) …	(4.1.2) …	(4.1.3) …	(4.1.4) …	(4.1.5) …

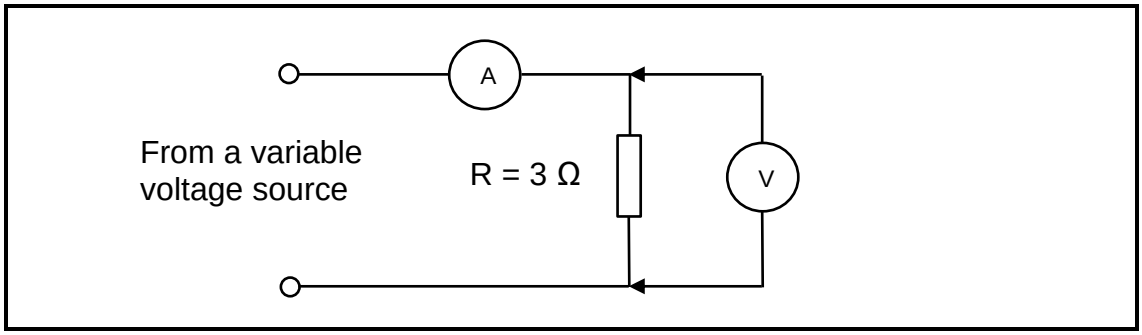

FIGURE 4

(5 × 1) (5)

4.2 Briefly describe a safe method of testing transformers. (5)

4.3 Explain how the following two common tests on cables are conducted.

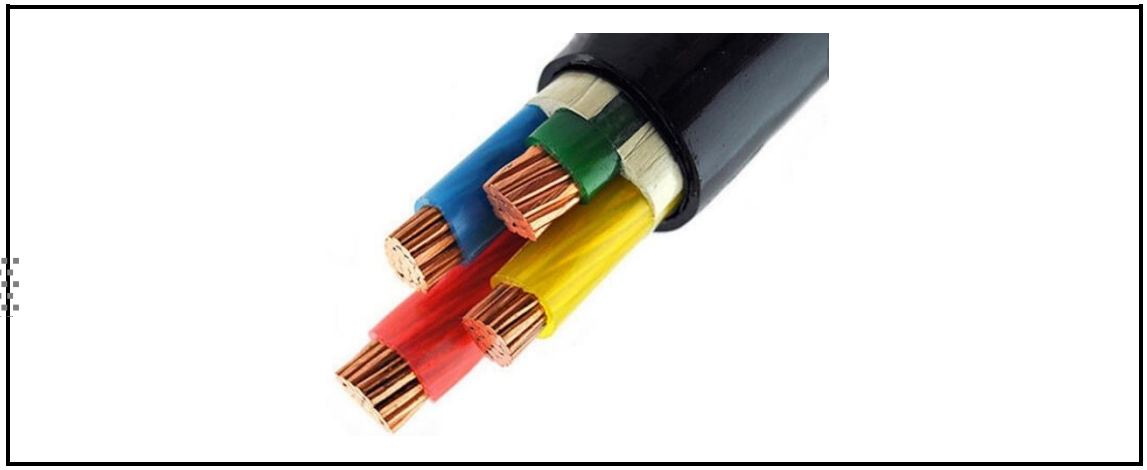

FIGURE 5

4.3.1 Continuity test (3)

4.3.2 Insulation resistance test (2)

4.4 Explain how the input-to-output technique works in fault finding. (2)

4.5 The last step on the five-step approach to fault finding is 'rectify the fault'.

Explain this step. (3)

[20]

QUESTION 5

5.1 FIGURE 5 below shows a distribution board found in a domestic installation. Complete a materials list for installing the distribution board.

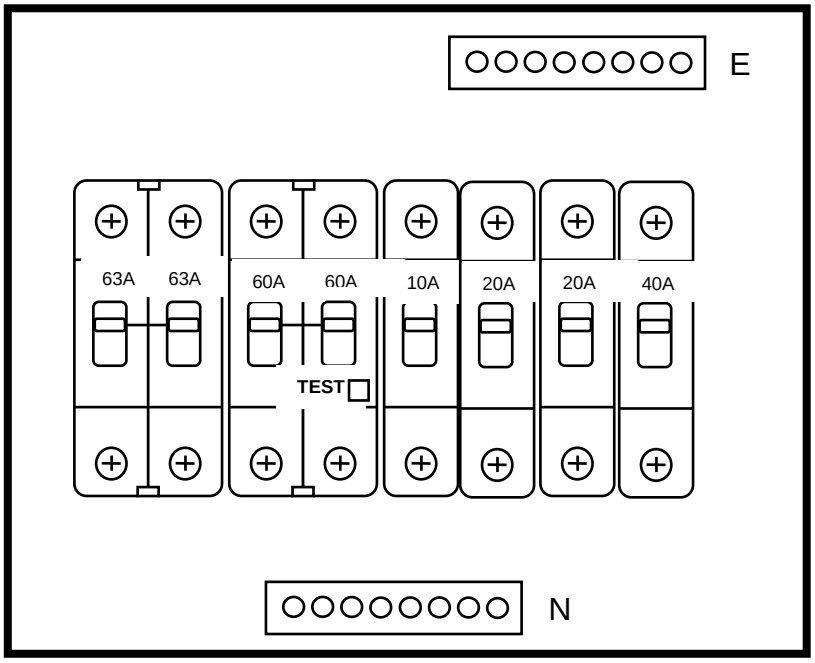

FIGURE 5

HINT: Use the table below:

Description	Qty

(5)

5.2 State the information you will need to collect to estimate your budgeted income. (5)

[10]

TOTAL: 100

Copyright reserved

FORMULAE SHEET – ELECTROTECHNOLOGY LEVEL 2

1. $\boldsymbol{P = V\ I\ Cos\phi}$

2. $Q = V\ I\ Sin\phi$

3. $\boldsymbol{S = V\ I}$

4. $\boldsymbol{V = I\ R}$

5. $P = V\ I$

6. $\boldsymbol{X_L = 2\pi\ f\ L}$

7. $X_C = \dfrac{1}{2\pi\ f\ C}$

8. $\boldsymbol{Z = \sqrt{R^2 + (X_L - X_C)^2}}$

9. $V_T = \sqrt{V_R^2 + (V_L - V_C)^2}$

10. $V_1 = \left(\dfrac{R_1}{R_t}\right) V_T$

11. $V_L = IX_L$

12. $I_T = \sqrt{I_R^2 + (I_L - I_C)^2}$

13. $tan\emptyset = \dfrac{I_L - I_C}{I_R}$

14. $Z = \dfrac{V}{I}$

15. $A = \dfrac{\pi\ d^2}{4}$

16. $R_T = R_1 + R_2 + R_3 + \cdots + R_n$

17. $\dfrac{1}{R_T} = \dfrac{1}{R_1} + \dfrac{1}{R_2} + \dfrac{1}{R_3} + \cdots + \dfrac{1}{R_n}$

18. $C_T = C_1 + C_2 + C_3 + \cdots + C_n$

19. $\dfrac{1}{C_T} = \dfrac{1}{C_1} + \dfrac{1}{C_2} + \dfrac{1}{C_3} + \cdots + \dfrac{1}{C_n}$

20 $L_T = L_1 + L_2 + L_3 + \cdots + L_n$

21 $\dfrac{1}{L_T} = \dfrac{1}{L_1} + \dfrac{1}{L_2} + \dfrac{1}{L_3} + \cdots + \dfrac{1}{L_n}$

22. $Q = C\ V$

23. $\boldsymbol{R_t = R_0(1 + \alpha t)}$

24. $\dfrac{V_1}{V_2} = \dfrac{N_1}{N_2} = \dfrac{I_2}{I_1}$

25. $\boldsymbol{I_1 = \left(\dfrac{R_2}{R_1 + R_2}\right) I_T}$

26. $V_C = IX_C$

27. $R = \dfrac{p\ l}{A}$

28. $tan\emptyset = \dfrac{X_L - X_C}{R}$

29. $E = I^2\ R\ t$

30. $n_s = \dfrac{f}{p}$

31. $E = V + I\ r$

Copyright reserved