higher education & training

Department:
Higher Education and Training
REPUBLIC OF SOUTH AFRICA

NATIONAL CERTIFICATE (VOCATIONAL)

ELECTRONICS
NQF LEVEL 2

(10041012)

21 November 2023 (Y-paper)
13:00–16:00

This question paper consists of 7 pages.

203Q1N2321

Copyright reserved

DEPARTMENT OF HIGHER EDUCATION AND TRAINING
REPUBLIC OF SOUTH AFRICA

NATIONAL CERTIFICATE (VOCATIONAL)
ELECTRONICS
NQF LEVEL 2
TIME: 3 HOURS
MARKS: 100

INSTRUCTIONS AND INFORMATION

1. Answer all the questions.
2. Read all the questions carefully.
3. Number the answers according to the numbering system used in this question paper.
4. Start each question on a new page.
5. Use only black or blue pen.
6. Write neatly and legibly.

Copyright reserved

QUESTION 1

Various options are given as possible answers to the following questions. Choose the answer and write only the letter (A–D) next to the question number (1.1–1.10) in the ANSWER BOOK.

1.1 Which ONE of the following hand tools are you NOT likely to use when soldering?

A Angle grinder
B Side cutter
C Long nose pliers
D Wire stripper

1.2 When heating a semiconductor material what happens to the resistance of the semiconductor?

A Increases
B Decreases
C Remains constant
D None of the above

1.3 In common electrical terminology, what is the meaning of the acronym DC?

A Desk Calculator
B Direct Current
C Direct Charging
D Diameter Coefficient

1.4 Which ONE of the below is NOT a recommended method of cleaning your testing equipment?

A Damp cloth
B Wet cloth
C Specialised cleaning wipes
D A and B

1.5 Indicate what range you would put your multimeter to measure a fault on a domestic house.

A 500 Volts DC
B 200 Volts AC
C 200 Volts DC
D 500 Volts AC

Copyright reserved

1.6 Which ONE of the below is NOT a consequence of not caring for your testing equipment?

A Inaccurate readings
B Total failure of testing equipment
C Fluctuating readings
D Accurate readings

1.7 It is advised that you … the batteries of electrical testing equipment when not in use.

A remove
B do not remove
C both A and B
D dispose of

1.8 Which ONE of the below is the definition of a c*apacitor*?

A A device having resistance to the passage of an electric current.
B A component in an electric or electronic circuit which possesses inductance.
C Consisting of one or more cells
D A device used to store an electric charge, consisting of one or more pairs of conductors separated by an insulator.

1.9 Which ONE of the below is NOT a characteristic of a good soldering joint?

A Smooth
B Dull
C Shiny
D Clean

1.10 Solder is made of … which is melted using a hot iron.

A Tin and lead
B Cadium
C Iron
D Cadmium

(10 × 1) **[10]**

Copyright reserved

QUESTION 2

2.1 Provide FIVE characteristics of magnet lines of flux in terms of magnetic theory. (5)

2.2 Draw the IEC symbol of a fixed resistor. ☆ (2)

2.3 In terms of Ohm's Theory, If Voltage remains constant and resistance in a circuit increases what will happen to the current flowing through the circuit?

Explain why this will happen. (2)

2.4 Consider the following scenario:

You have an electrical circuit with a source (4 Volts) and two resistors (1 Ohm each) and a single-pole switch. You want to reduce the current flow in the circuit to 1 Amp. Would you place the resistors in series or parallel in your circuit and clearly explain why with calculations. (5)

[14]

☆

QUESTION 3

3.1 What is meant with the term *free electron*? (2)

3.2 Identify the below electrical symbols.

3.2.1 

3.2.2 

3.2.3 

(3 × 1) (3)

3.3 What is the difference between an LED and photodiode? ☆ (2)

3.4 Explain the difference between half-wave and full-wave rectification. (2)

[9]

QUESTION 4

4.1 What is the definition of an *accident* according to the Occupational Health and Safety Act (No. 85 of 1993)? (2)

4.2 Briefly explain what is meant with *earthing* as it pertains to electrical safety. (3)

4.3 List any FIVE causes of electrical shock. (5)

[10]

☆

QUESTION 5

5.1 What SI Unit is *resistance* measured in and what is the symbol used? (2)

5.2 Can a multimeter measure inductance? (1)

5.3 Explain how a multimeter measures capacitance. (3)

[6]

QUESTION 6

6.1 What personal protective equipment would you use when soldering? Mention any THREE. (3)

6.2 How do you dispose of solder in terms of human safety and environmental management principles? (2)

6.3 How would you clean dirt or oxidation of connections? (2)

6.4 Which TWO types of soldering irons would you consider when you are not sure if the work site might not have electricity? (2)

[9]

QUESTION 7

7.1 In FIGURE 1 identify components labelled as A, B, R and X. (4)

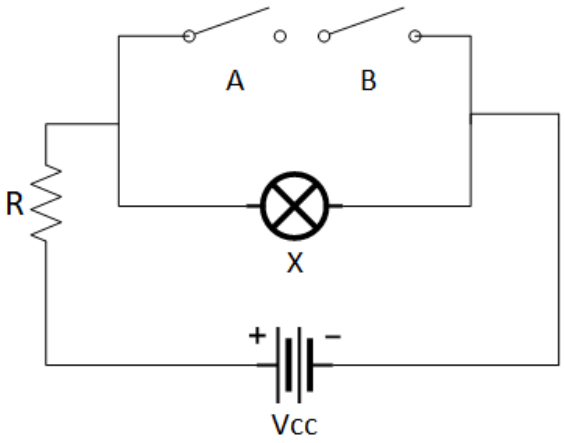

FIGURE 1

7.2 Explain which type of soldering iron you would take to a job site where you may not have access to mains power (electricity). (2)

7.3 Explain how to clean and store tools and equipment according to worksite procedures. (2)

7.4 What is a job card? (2)

7.5 List any THREE good housekeeping habits. (3)
[13]

QUESTION 8

8.1 Provide the base for both the decimal and binary number systems. (2)

8.2 Draw the truth table for a THREE input AND Gate. (4)
[6]

QUESTION 9

9.1 What is meant with a discrete signal when working with PLCs? (2)

9.2 What is a field device? (2)

9.3 What are mnemonics? (2)

9.4 List the FIVE most used symbols used in PLC Ladder Diagrams. (5)

9.5 What is a ladder diagram in terms of a PLC? (2)
[13]

QUESTION 10

10.1 What is *modulation* and *demodulation*? (4)

10.2 What is a *file server*? (2)

10.3 *Modem* is an abbreviation for what device? (2)

10.4 What are the two main materials used in *fibre optic cable*? (2)
[10]

TOTAL: 100

Copyright reserved