higher education & training

Department:
Higher Education and Training
REPUBLIC OF SOUTH AFRICA

MARKING GUIDELINE

NATIONAL CERTIFICATE (VOCATIONAL)

ELECTRONIC CONTROL AND DIGITAL ELECTRONICS
NQF LEVEL 2

07 November 2022

This marking guideline consists of 9 pages.

Copyright reserved

INSTRUCTIONS TO MARKERS

1. Mark all the questions.
2. Follow the answers according to the numbering system used in this question paper.
3. Round off to TWO decimal places.
4. Use only a red pen.
5. Put your ticks and crosses neatly and legibly.

Copyright reserved

QUESTION 1

1.1
1.1.1 False
1.1.2 False
1.1.3 True
1.1.4 True
1.1.5 False

(5 × 1) (5)

1.2

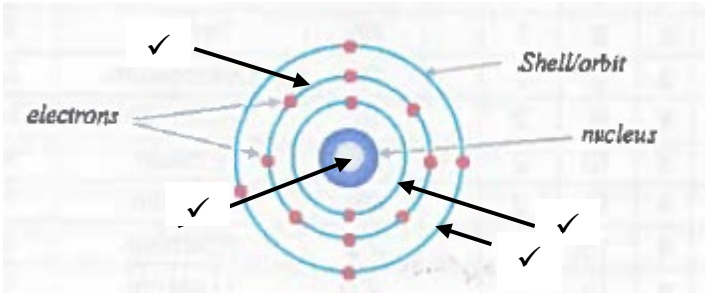

(4)

1.3
- An ionic bond forms between two oppositely charged ions that formed when electrons were transferred from one atom to another.
- A metallic bond occurs in metals such as copper and silver, which are good conductors.
- A covalent bond is the mutual sharing of electrons between atoms to complete a valence shell. (Any 2 × 2) (4)

1.4 Yellow Violet Yellow Gold

(½ mark for each colour) (2)

1.5
- Maximum forward current✓ –the highest instantaneous forward current that a PN junction can conduct without damaging the junction.✓
- Peak inverse voltage✓ – the maximum reverse voltage that can be applied to a PN junction without damaging the junction.✓
- Maximum power rating – the maximum power that can be dissipated at a junction without causing any danger. (Any 2 × 2) (4)

1.6 A BJT is a three-terminal device consisting of two PN junctions and three layers of semiconductor material manufactured on a single silicon crystal. (1)

[20]

Copyright reserved

QUESTION 2

2.1
- Because the various components of an integrated circuit (IC) are part of a small semiconductor chip, they cannot be removed or replaced. Therefore, the whole IC has to be replaced if any of its components fails.
- ICs have a limited power rating because it is impossible to manufacture high-power ICs.
- Inductors and transformers have to be connected outside the semi-conductor chip, because it is impossible to fabricate them on a semi-conductor's chip surface.
- ICs operate at a fairly low voltage.
- Because they are quite delicate, they cannot withstand rough handling or excessive heat.
- A capacitor must be connected outside a semiconductor chip because it is inconvenient and uneconomical to fabricate capacitances exceeding 30 Pf.
- It is difficult to achieve a low temperature coefficient.
- It is difficult to fabricate an IC with low noise.
- High value of saturation resistance of transistors.
- Voltage dependence of resistors and capacitors. (Any 4 × 1) (4)

2.2
- Inverting amplifier
- Non-inverting amplifier
- Voltage follower
- Voltage summer or adder (Any 3 × 1) (3)

2.3 2.3.1



✓

2.3.2



✓

2.3.3

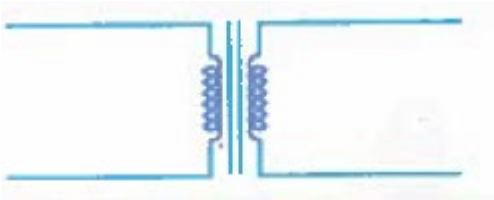

✓

2.3.4



✓

2.3.5  ✓

(5 × 1) (5)

2.4
- Set the digital multimeter to diode test.
- Connect each part of the transistor, N, P and N, to give a total of three connections.
- With the two connections of a diode, only two resistance reading are taken; that is, one in each direction across the two terminals.
- With three terminals, six resistance readings are possible. (4)

2.5 2.5.1

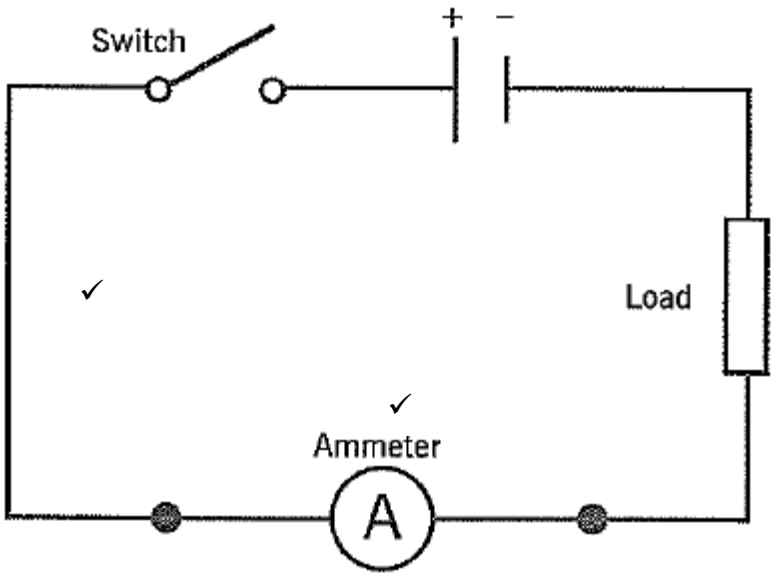

✓ ✓ ✓

2.5.2

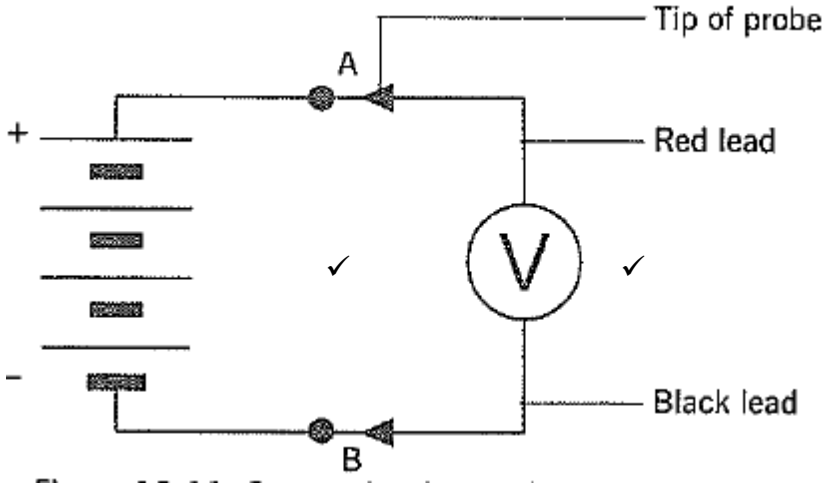

✓ ✓

2.5.3

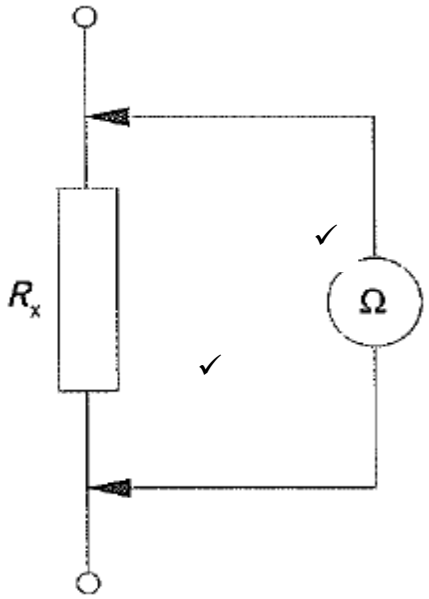

(3 × 2) (6)

2.6

$$L_1 = 30\ mH, \quad L_2 = 50\ mH$$
$$L_T = L_1 + L_2 ✓$$
$$= (30 + 50)\ mH ✓$$
$$= 80\ mH ✓$$

(3)

[25]

QUESTION 3

3.1
- Greater noise immunity.
- Cheap and easily produced.
- Digital signals do not get corrupted by noise.
- Digital signals typically use less bandwidth.
- Digital signals can be encrypted.
- Enables transmission of signals over a long distance.
- Transmission is at a higher rate and with a considerable broadband width.
- It is more secure.
- It is more reliable.
- It is also easier to translate human audio and video signals and other massages into human language.
- Electromagnetic interference is minimal in digital technology.
- It enables simultaneous multi-directional transmission.
- Digital systems are more durable than analogue systems. (Any 4 × 1) (4)

3.2 On positive logic if the more positive of the two voltages or current levels represents logic 1,✓ and the less positive of the two levels represents logic.✓ (2)

3.3

$$1 \quad 1 \quad 1 \quad 0 \quad 1$$
$$2^4 \ 2^3 \ 2^2 \ 2^1 \ 2^0 ✓$$
$$= (1 \times 16) + (1 \times 8) + (1 \times 4) + (0 \times 2) + (1 \times 1) ✓$$
$$= 29_{10} ✓$$

(3)

3.4

$$\frac{568}{2} = 284 \quad rem\ 0$$
$$\frac{284}{2} = 142 \quad rem\ 0$$
$$\frac{142}{2} = 71 \quad rem\ 0$$
$$\frac{71}{2} = 35.5 \quad rem\ 1$$
$$\frac{35}{2} = 17.5 \quad rem\ 1$$
$$\frac{17}{2} = 8.5 \quad rem\ 1$$
$$\frac{8}{2} = 4 \quad rem\ 0$$
$$\frac{4}{2} = 2 \quad rem\ 0$$
$$\frac{2}{2} = 1 \quad rem\ 0$$
$$\frac{1}{2} = 0.5\ ✓ \quad rem\ 1✓$$
$$1000111000_2 = 568_{10}✓$$ (3)

3.5 3.5.1

$$\begin{array}{r} 1\ 1\ 1\ 1 \\ 1\ 1\ 0 \\ \hline 1\ 0\ 1\ 0\ 1 \end{array} ✓✓$$

3.5.2

$$\begin{array}{r} 1\ 1\ 0\ 1 \\ 1\ 0\ 0\ 1 \\ \hline 0\ 1\ 0\ 0✓✓ \end{array}$$

(2 × 2) (4)

3.6

$$\begin{array}{r} 1\ 0\ 0\ 1 \\ 1\ 0\ 1\ 1 \rightarrow 0\ 1\ 0\ 0✓ \quad one's\ complement \\ add\ 1\ 0\ 0\ 1 \\ \hline 0\ 1\ 0\ 0✓ \\ \hline 1\ 1\ 0\ 1✓ \quad complement\ again \\ 0\ 0\ 1\ 0✓✓ \end{array}$$ (5)

3.7 In an odd parity bit, the total number of 1's in the data✓ and a plus parity bit must be an odd number.✓ (2)

3.8

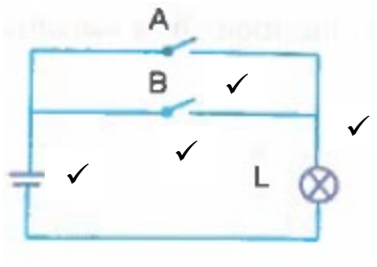

(4)

3.9

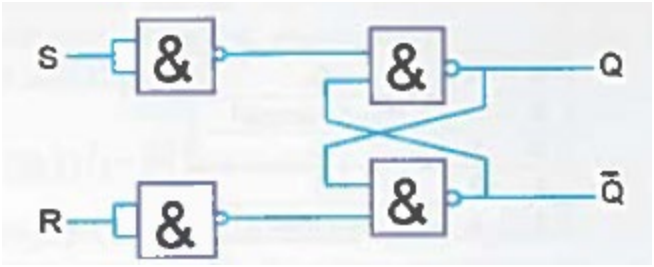

(½ mark for each gate, ½ mark for each input, ½ mark for each output, and 1 mark for a correct drawing) (5)

3.10

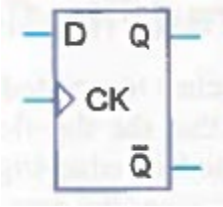

(ONE mark for the input and ONE mark for each output) (3)
[35]

QUESTION 4

4.1 Hardware is the physical part of a computer, which consists of all digital circuitry. (1)

4.2 4.2.1 A serial port sends and receives one bit of information at a time.

4.2.2 A parallel port sends multiple bits of information at the same time over several sets of wire.

(2 × 1) (2)

4.3 Binary digital information is stored as pits created in a single, continuous track that starts at the centre of the disk and spirals outwards.✓ These pits are read by a laser and processed as digital information.✓ The laser of a DVD has a shorter wavelength than the laser of a CD and is more accurate.✓ Therefore, it can deal with smaller pit sizes and tracks that are packed more tightly. Up to seven times more information can be stored on a DVD than on a CD.✓
These changes happen faster and create a stream of off/on bits.✓ Half of the information in this signal is used to arrange the data in sequences and patterns so that it can be read accurately as a string of pulses.✓ About 13% of the remaining digital signal is extra information for correcting errors.✓ (7)
[10]

QUESTION 5

5.1
- Conductive probes
- Capacitive probes
- Ultrasonic probes (3)

5.2
- Positive temperature coefficient (PTC)
- Negative temperature coefficient (NTC) (2)

5.3 When sunlight shines on the surface of the cell,✓ particles of light, called photons,✓ bounce into negatively charged electrons around the silicon atoms of the cell, causing these electrons to be free.✓ The free electrons then move through the cell, creating and filling out the cell.✓ The movement of electrons and holes generates electricity.✓ (5)

[10]

TOTAL: 100

Copyright reserved