higher education & training

Department:
Higher Education and Training
REPUBLIC OF SOUTH AFRICA

NATIONAL CERTIFICATE (VOCATIONAL)

ELECTRICAL SYSTEMS AND CONSTRUCTION
NQF LEVEL 2

(12041032)

28 November 2023 (Y-paper)
13:00–16:00

This question paper consists of 7 pages.

445Q1N2328

Copyright reserved

DEPARTMENT OF HIGHER EDUCATION AND TRAINING
REPUBLIC OF SOUTH AFRICA

NATIONAL CERTIFICATE (VOCATIONAL)
ELECTRICAL SYSTEMS AND CONSTRUCTION
NQF LEVEL 2
TIME: 3 HOURS
MARKS: 100

INSTRUCTIONS AND INFORMATION

1. Answer all the questions.
2. Read all the questions carefully.
3. Number the answers according to the numbering system used in this question paper.
4. Start each section on a new page.
5. Use only a blue or black pen.
6. Write neatly and legibly.

Copyright reserved

QUESTION 1

1.1 Various options are given as possible answers to the following questions. Choose the answer and write only the letter (A–D) next to the question number (1.1.1–1.1.5) in the ANSWER BOOK.

1.1.1 Bonding to earth of the following is compulsory:

A Geyser
B Stove
C Hot- and cold-water pipes
D A and C

1.1.2 The test circuit of an earth leakage relay (ELR) is used to test the ... of the ELR.

A polarity
B continuity
C sensitivity
D None of the above

1.1.3 When the water in a geyser reaches the pre-determined value, the thermostat will …

A close the circuit.
B open the circuit.
C A and B.
D All of the above.

1.1.4 Distribution boards can be installed indoors and mounted at a minimum height of …

A 2,2 m.
B 0,2 m.
C 1,2 m.
D None of the above.

1.1.5 A socket outlet circuit is normally protected by a … circuit breaker.

A 10 A
B 15 A
C 20 A
D B and C

(5 × 1) (5)

1.2 Describe the procedure to be followed when testing the resistance of earth continuity conductors. (5)

1.3 Draw a neat and fully labelled circuit diagram to show how ONE light is controlled from TWO different positions in a long passage. (6)

Copyright reserved

1.4 The OHS Act 85 of 1993 defines a hazard as a source of danger, such as the risk of being electrocuted, or exposure to excessive heat and noise.

List FOUR sources of hazards. (4)

1.5 Name THREE of the most common electrical diagrams used in the electrical field. (3)

1.6 Define the term *earthing terminal*. (2)
[25]

QUESTION 2

2.1 Indicate whether the following statements are TRUE or FALSE by writing only 'True' or 'False' next to the question number (2.1.1–2.1.5) in the ANSWER BOOK.

2.1.1 Joints must be electrically and mechanically sound.

2.1.2 A safety observer is a person who monitors all aspects of the workplace.

2.1.3 Report an accident after the work is done in order to save time.

2.1.4 The minimum allowable reading when conducting an insulation resistance test is 0,9 MΩ.

2.1.5 A cable knife is used to cut the wire armouring of a cable.

(5 × 1) (5)

2.2 Explain the procedure you will follow when joining TWO conductors using a strip connector. (5)

2.3 A cable gland acts as a sealing and terminating device to ensure the protection of electrical equipment and enclosures.

Name FIVE criteria to consider when selecting a cable gland. (5)

2.4 Effective teamwork is an important aspect of any organisation's success.

List FIVE characteristics of an effective team. (5)
[20]

Copyright reserved

QUESTION 3

3.1 Complete the following sentence by writing only the missing word or words next to the question number (3.1.1–3.1.5) in the ANSWER BOOK.

Tagout is defined as the practice of using (3.1.1) … in combination with locks. A tagout device increases the visibility of the (3.1.2) … and also indicates the status of the (3.1.3) … . It indicates that the equipment is not to be (3.1.4) … without the consent of the (3.1.5) … concerned.

(5 × 1) (5)

3.2 Motor bases serve as mounts for electric motors.

List THREE types of motor bases. (3)

3.3 A motor controller is the actual device that energises and de-energises a motor circuit.

List FIVE purposes that a motor controller is used for. (5)

3.4 Identify the following DC motors by writing only the answer next to the question number (3.4.1–3.4.2) in the ANSWER BOOK.

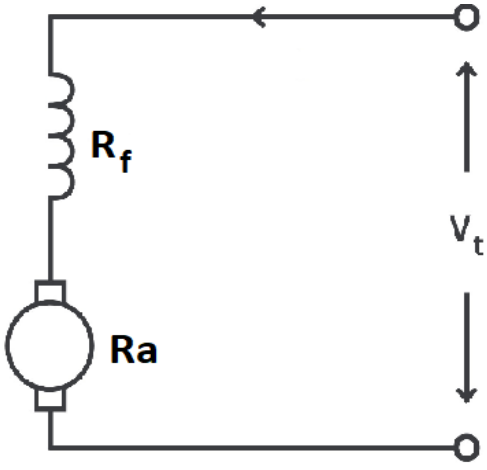

3.4.1

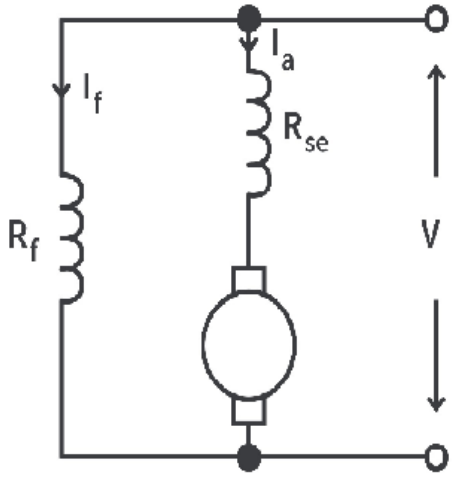

3.4.2

(2)

[15]

QUESTION 4

4.1 Choose a term from COLUMN B that matches a description in COLUMN A. Write only the letter (A–F) next to the question number (4.1.1–4.1.5) in the ANSWER BOOK.

COLUMN A		COLUMN B	
4.1.1	Perform test quickly to check if the circuit-breaker is faulty or not	A	voltage test
4.1.2	During routine testing – check by turning circuit-breaker on and off several times	B	continuity test
4.1.3	Test the proper action of the component by applying overload current through the circuit	C	insulation resistance test
4.1.4	Testing between the line and load terminals (with circuit breaker in the OFF position)	D	overload tripping test
4.1.5	Testing for deterioration; measure the resistance across each pole of a circuit-breaker	E	contact resistance test
		F	mechanical operation

(5 × 1) (5)

4.2



4.2.1 Identify the component in the FIGURE above. (1)

4.2.2 State what will happen if the test button is pressed while current is flowing through this device. (1)

4.2.3 Briefly describe how the sensitivity of this device can be checked. (5)

4.3 A fuse is an important component in an electrical circuit.

Briefly explain how a fuse can be tested when the circuit is switched off. (3)

[15]

QUESTION 5

5.1 Various factors affect the accuracy of meters or instruments.

List SIX such factors. (6)

5.2 What is a job card? (1)

5.3 As a contractor you have been given a task to change old analogue meters to digital meters for the residents of Vereeniging.

As part of your planning, list THREE things that you are required to do before starting with this task. (3)

5.4 List FIVE requirements that cabling routes should adhere to when mounting metering units. (5)

[15]

QUESTION 6

6.1 Photovoltaic (PV) power generation has become the leading source of renewable energy.

List FIVE advantages of photovoltaic installations. (5)

6.2 Two PV modules of 18V:3A each are connected in a circuit.

What will be the value of

6.2.1 the total voltage, if these modules are connected in series?

6.2.2 the total current, if these modules are connected in parallel?

(2 × 1) (2)

6.3 Explain the function of the following:

6.3.1 Motor

6.3.2 PNP transistor

6.3.3 Zener diode

(3 × 1) (3)

[10]

TOTAL: 100

Copyright reserved