higher education & training

Department:
Higher Education and Training
REPUBLIC OF SOUTH AFRICA

NATIONAL CERTIFICATE (VOCATIONAL)

CONCRETE STRUCTURES
NQF LEVEL 2

(12020132)

17 November 2022 (Y-paper)
13:00–16:00

Scientific calculators may be used.

This question paper consists of 6 pages.

437Q1N2217

Copyright reserved

TIME: 3 HOURS
MARKS: 100

INSTRUCTIONS AND INFORMATION

1. Answer all the questions.
2. Read all the questions carefully.
3. Number the answers according to the numbering system used in this question paper.
4. Make all drawings to the required scale.
5. Use your discretion where dimensions are not given.
6. Start each question on a new page.
7. Use only a black or blue pen.
8. Write neatly and legibly.

Copyright reserved

QUESTION 1

1.1 List FOUR concrete structures that were the first to be built in America. (4)

1.2 Give THREE guidelines to build formwork accurately and safely. (3 × 2) (6)

[10]

QUESTION 2

Explain, with the aid of fully detailed sketches, the different types of results that can be obtained when performing a slump test. **[10]**

QUESTION 3

3.1 Define each of the following terms:

3.1.1 Soldiers

3.1.2 Walings

(2 × 2) (4)

3.2 Hydrostatic pressure increases in proportion to the depth measured from the surface because of the increasing weight of fluid. The pressure acts in all directions.

Make a neat triangular hydrostatic diagram to explain hydrostatic pressure at the bottom of concrete. (7)

3.3 What does each of the following symbols used in hydrostatic formulae stand for?

3.3.1 P

3.3.2 p

3.3.3 g

3.3.4 h

(4 × 1) (4)

[15]

Copyright reserved

QUESTION 4

4.1 The diagram below shows the construction of the formwork for an L-shape.

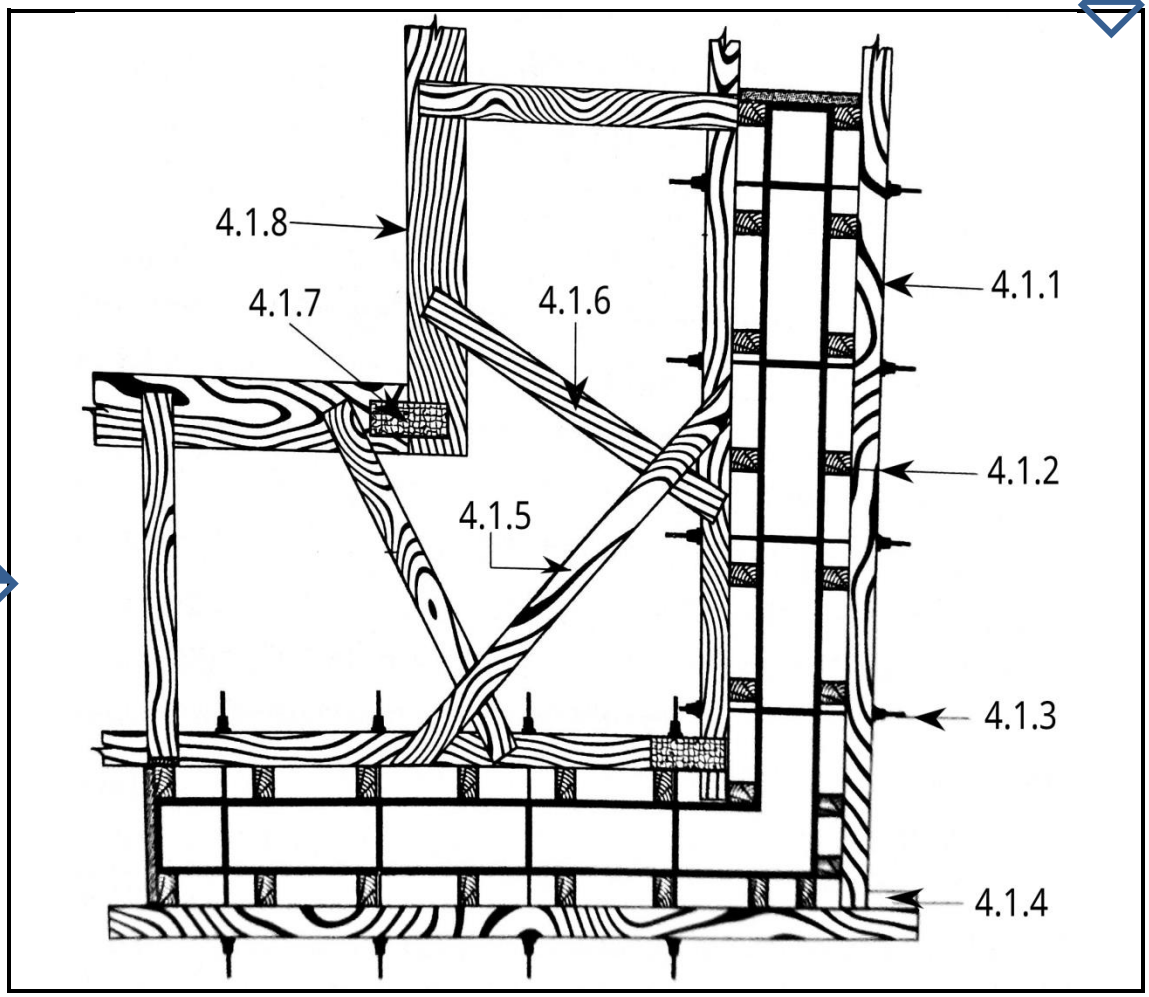

Label all parts of the formwork by writing only the answer next to the question number (4.1.1–4.1.8) in the ANSWER BOOK. (8 × 1) (8)

4.2 Give FOUR uses of wedges in formwork shutters. (4)

4.3 Give SIX reasons why release agents are used when casting concrete in formwork. (6)

4.4 Indicate whether the following statements are TRUE or FALSE by writing only 'True' or 'False' next to the question number (4.4.1–4.4.7) in the ANSWER BOOK.

4.4.1 A riser is the upright part of a step on a set of stairs.

4.4.2 Bearers are the shorter lengths of timber placed across the ledgers.

4.4.3 Panels are flat pieces of material used to make formwork.

4.4.4 Stringers are pieces on the sides of walls and part of the framework to steps.

4.4.5 Starter bars are used to jump a concrete slab with a column.

4.4.6 Stop-ends are used to allow concrete to run out of the wall formwork.

4.4.7 Cleats are the pieces used to strengthen formwork.

(7 × 1) (7)
[25]

QUESTION 5

5.1 List THREE materials used to manufacture water stops. (3)

5.2 When are each of the following joints used in construction?

5.2.1 Expansion joint

5.2.2 Movement joint

(2 × 2) (4)

5.3 Explain THREE typical positions of construction joints. (3)
[10]

QUESTION 6

6.1 Complete the following sentence by writing only the missing word or words next to the question number (6.1.1) in the ANSWER BOOK.

Contaminate means to make a place or substance dirty or harmful by putting something such as (6.1.1) … in it. (1)

6.2 List SIX characteristics of a good release agent applied to form face material. (6)

6.3 State THREE conditions in which a release agent may be applied to form faces. (3)
[10]

QUESTION 7

7.1 Copy and complete the inspection checklist below by writing the answer next to the question number (7.1.1–7.1.5) in the ANSWER BOOK.

(7.1.1) …				
Project:				
Inspection		**Comments**	(7.1.2) …	**Signature**
1.	Joint between walls/columns and kickers correctly positioned and sealed grout tight			
2.	(7.1.3) …			
3.	All services (electrical conduits, downpipes, service ducts and water pipes) in place according to drawings and specifications			
4.	Conduits and service ducts have a double draw wire visible at either end to facilitate drawing of conductors at a later stage			
5.	(7.1.4) …			
6.	Backup poker vibrator available and a sufficient supply of fuel			
7.	Correct release agent used and properly applied to the formwork so that there is a thin film but no pools			
8.	(7.1.5) …			

(5 × 1) (5)

7.2 Explain the FIVE stages of concrete curing. (5)

7.3 Explain the effects of poorly fitted joints in formwork. (2)

7.4 How can grout leakage in formwork be reduced? (5)

7.5 After how many days does concrete reach its maximum strength? (1)

7.6 What is the danger of decorated rebates in a concrete structure? (2)

[20]

TOTAL: 100

Copyright reserved