higher education & training

Department:
Higher Education and Training
REPUBLIC OF SOUTH AFRICA

NATIONAL CERTIFICATE (VOCATIONAL)

CIVIL AND STRUCTURAL STEELWORK DETAILING
NQF LEVEL 2

(12050652)

07 November 2022 (Y-paper)
13:00–16:00

REQUIREMENTS: **A3 Drawing paper**
Drawing instruments

Calculators may be used.

This question paper consists of 5 pages.

Copyright reserved

TIME: 3 HOURS
MARKS: 100

INSTRUCTIONS AND INFORMATION

1. Answer all the questions.
2. Read all the questions carefully.
3. Number the answers according to the numbering system used in this question paper.
4. The drawings, sketches and diagrams must be done in pencil.
5. The sketches and/or diagrams must be neat, reasonably large, in proportion and fully labelled.
6. All the abbreviations and symbols must comply with the latest National Building Regulations and all relevant SANS (SABS)-codes.
7. Start each question on a new page.
8. Use only blue or black ink.
9. Write neatly and legibly.

Copyright reserved

QUESTION 1: INTRODUCTION TO CIVIL AND STRUCTURAL STEELWORK

1.1 Name any TWO methods of connecting an 8 mm tie plate to the top of an angle roof truss rafter. (2)

1.2 What is the main responsibility of a structural-steel detailer? (2)

1.3 FIGURE 1 below shows a pictorial view of a portal-framed structural-steel building. Choose the name of each indicated member from the given list and write the answer next to the question number (1.3.1–1.3.10) in the ANSWER BOOK.

rafter; column; base plate; bay; ridge line; sheeting rails; girts; eaves line; lean-to rafters; bracing; roof bracing; purlins; sag rails; brick wall; gable rafters; truss; gable posts; column bracing

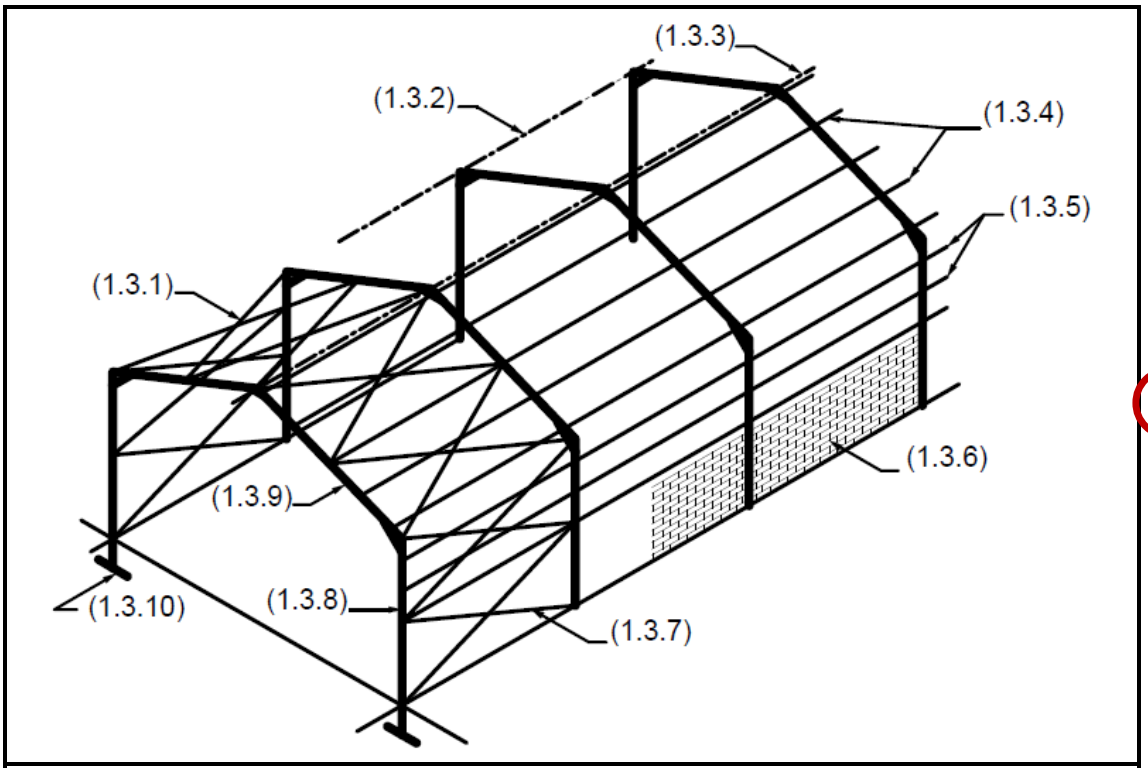

FIGURE 1

(10)

1.4 Give the abbreviations for the following:

1.4.1 Damp-proof membrane

1.4.2 Manhole

1.4.3 Inspection chamber

1.4.4 Rodding eye

(4 × 1) (4)

1.5 Make a neat freehand sketch of each of the following types of bridges:

1.5.1 Town lattice truss (covered)

1.5.2 Trussed deck arch

1.5.3 Deck plate girder

1.5.4 Solid ribbed arch

1.5.5 Pratt truss

(5 × 3) (15)

1.6 Make a scaled drawing of each of the following:

1.6.1 The top four steps of a concrete staircase. Clearly indicate the following: the landing, tread, waist, and rise.

1.6.2 A reservoir.

(2 × 6) (12)
[45]

QUESTION 2: STRUCTURAL STEELWORK AND REINFORCED CONCRETE

2.1 Choose a description from COLUMN B that matches a word in COLUMN A. Write only the letter (A–E) next to the question number (2.1.1–2.1.5) in the ANSWER BOOK.

COLUMN A		COLUMN B	
2.1.1	Stress	A	capable of being shaped, bent or drawn
2.1.2	Strain	B	the ability of a metal to resist forces that try to break or deform it
2.1.3	Specimen	C	the extent to which an object stretches or shrinks due to the forces applied to it
2.1.4	Strength	D	the force that produces strain on an object
2.1.5	Ductile	E	a small quantity of material for use in testing, examination or study

(5 × 1) (5)

2.2 Explain the purpose of reinforcing concrete. (2)

2.3 Explain with the aid of a diagram the manufacturing process of structural steel. (20)

Copyright reserved

2.4 Give FIVE properties of cold-rolled steel profiles. (5)
[32]

QUESTION 3: BOLTS IN STRUCTURAL STEELWORK

3.1 Define the following terms commonly used to determine the position of bolt holes on a structural steel element:

3.1.1 The gauge

3.1.2 The edge distance

3.1.3 The pitch

3.1.4 The back mark

(4 × 2) (8)

3.2 FIGURE 2 below shows a longitudinal joint between two plates joined by means of two bolts.

State the THREE possible ways in which this joint may fail.

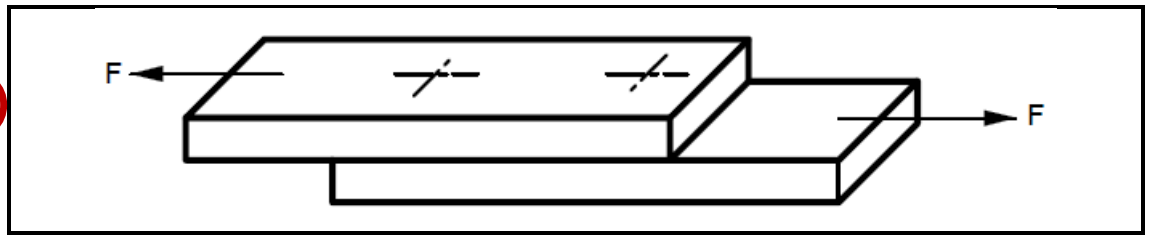

(3)

FIGURE 2

[11]

QUESTION 4: WELDING SYMBOLS AND JOINTS

4.1 Draw a neat, labelled sketch of a groove weld when two plates are butt welded. (7)

4.2 Name the FIVE basic elements of a welding symbol. (5)
[12]

TOTAL: 100

Copyright reserved