higher education & training

Department:
Higher Education and Training
REPUBLIC OF SOUTH AFRICA

NATIONAL CERTIFICATE (VOCATIONAL)

CIVIL AND STRUCTURAL STEEL WORK DETAILING
NQF LEVEL 2

(12050652)

16 November 2023 (Y-paper)
13:00–16:00

REQUIREMENTS: A3 drawing sheet

Calculators and drawing instruments may be used.

This question paper consists of 7 pages.

051Q1N2316

Copyright reserved

DEPARTMENT OF HIGHER EDUCATION AND TRAINING
REPUBLIC OF SOUTH AFRICA

NATIONAL CERTIFICATE (VOCATIONAL)
CIVIL AND STRUCTURAL STEEL WORK DETAILING
NQF LEVEL 2
TIME: 3 HOURS
MARKS: 100

INSTRUCTIONS AND INFORMATION

1. Answer all the questions.
2. Read all the questions carefully.
3. Number the answers according to the numbering system used in this question paper.
4. Start each question on a new page.
5. Sketches and/or diagrams must be neat, reasonably large, in proportion and fully labelled.
6. Clearly cross out all work you do not want to be marked.
7. All abbreviations and symbols must comply with the latest National Building Regulations and all relevant SANS (SABS) codes.
8. Make drawings, sketches and diagrams in pencil and use only a black or blue pen for other answers.
9. Write neatly and legibly.

Copyright reserved

QUESTION 1: INTRODUCTION TO CIVIL AND STRUCTURAL STEELWORK

1.1 Indicate whether the following statements are TRUE or FALSE by writing only 'True' or 'False' next to the question number (1.1.1-1.1.5) in the ANSWER BOOK.

1.1.1 A web is the outer part of a section.

1.1.2 A cross-sectional area is the perpendicular area seen when cutting across a section.

1.1.3 Uniaxial bending refers to bending around only one axis.

1.1.4 Hot-rolled profiles are steel members that are formed by pushing steel through rollers without being preheated.

1.1.5 Machine-threaded fasteners take a nut or thread into a tapped hole.

(5 × 1) (5)

1.2 Differentiate between a *column* and *beam*. (2)

1.3 Give THREE ways in which different types of bolts can be distinguished. (3)

1.4 Give the abbreviation for each of the following:

1.4.1 Not to scale

1.4.2 Rainwater pipe

1.4.3 Concrete

1.4.4 Fibre cement

1.4.5 Reinforced concrete

(5 × 1) (5)

1.5 Draw a diagram to show how the roleplayers of a construction project interact. (15)

1.6 FIGURE 1 shows an isometric view of a welded bracket

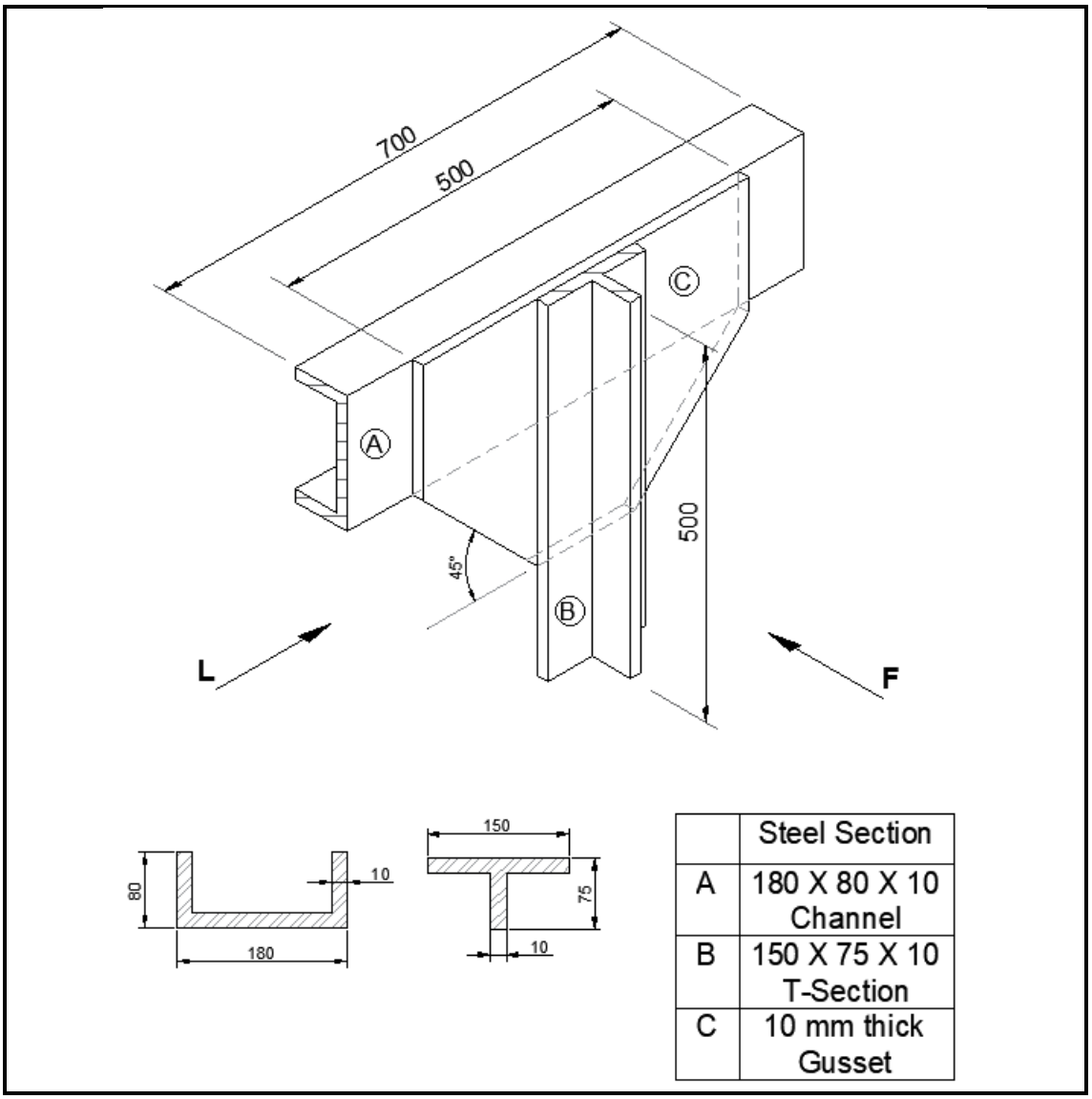

	Steel Section
A	180 X 80 X 10 Channel
B	150 X 75 X 10 T-Section
C	10 mm thick Gusset

FIGURE 1

Draw, to scale 1:5, the following TWO views in first-angle orthographic projection:

1.6.1 The front view as shown in the direction of arrow F

1.6.2 The side view as shown in the direction of arrow L

(2 × 5) (10)
[40]

QUESTION 2: STRUCTURAL STEELWORK AND REINFORCED CONCRETE

2.1 Choose a description from COLUMN B that matches a term in COLUMN A. Write only the letter (A–J) next to the question number (2.1.1–2.1.10) in the ANSWER BOOK.

COLUMN A		COLUMN B	
2.1.1	Casting	A	twisting or turning load on a structural element
2.1.2	Forging	B	lightweight sections added to a structure to improve the strength and rigidity of the structure
2.1.3	Buckling	C	member used to increase the stability of a structure
2.1.4	Shear	D	structure of various slender members connected together
2.1.5	Truss	E	to get thinner towards the end
2.1.6	Taper	F	force applied sideways to a body
2.1.7	Bracing	G	failure caused by bending permanently under load
2.1.8	Stiffener	H	molten iron or steel poured into a mould
2.1.9	Stirrup	I	process of forming hot steel with a hammer
2.1.10	Torsion	J	type of reinforcing in beams that holds rebars in place

(10 × 1) (10)

2.2 Name FIVE casting methods used in the manufacturing of structural steel. (5)

2.3 List FOUR materials required to make concrete. (4)

2.4 What is a *slump test* and why is it needed? (2)

2.5 Draw a neat, labelled diagram showing the stress-strain curve for concrete, cast iron and mild steel. (8)

[29]

Copyright reserved

QUESTION 3: BOLTS IN STRUCTURAL STEELWORK

3.1 Briefly describe a bolt. (2)

3.2 State FOUR specifications to keep in mind when buying bolts. (4)

3.3 FIGURE 2 shows a bolted joint in structural steel.

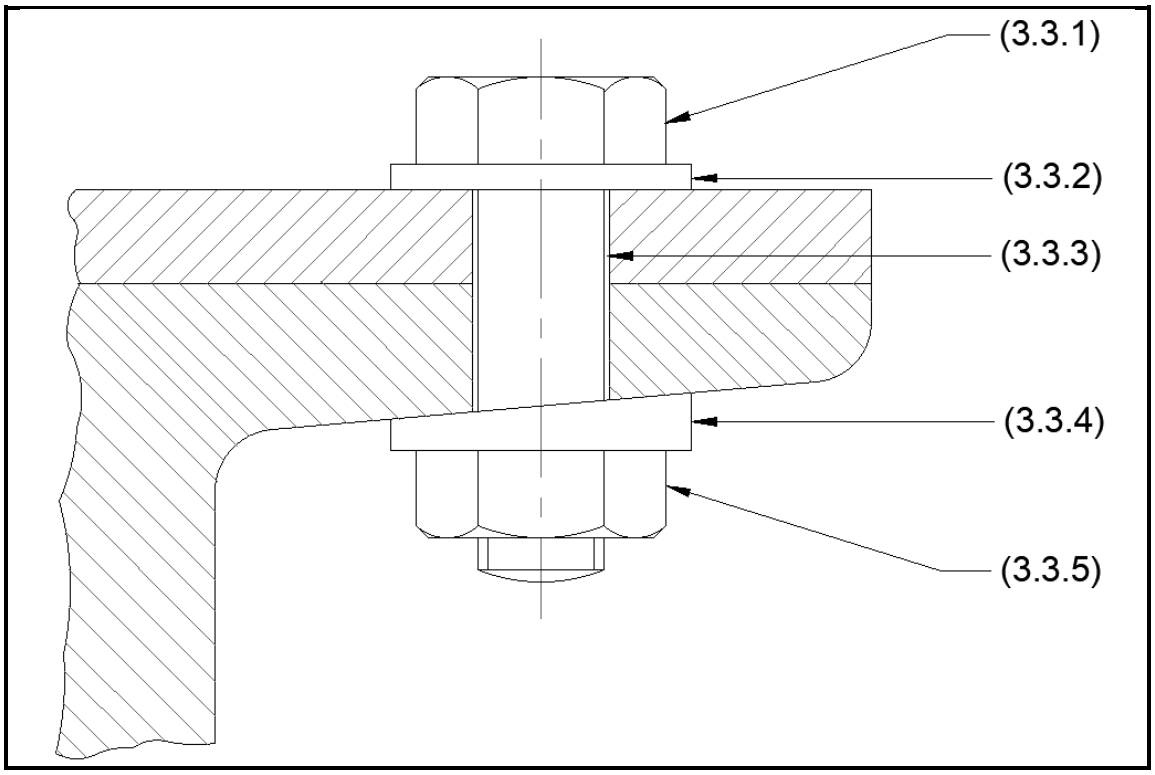

FIGURE 2

Name the parts of the bolted joint by writing only the answer next to the question number (3.3.1–3.3.5) in the ANSWER BOOK. (5 × 2) (10)

[16]

QUESTION 4: WELDING SYMBOLS AND JOINTS

4.1 Define each of the following welding terms:

4.1.1 Weld all round

4.1.2 Included angle

4.1.3 Weld pitch

4.1.4 Overlap

4.1.5 Tack-welded

(5 × 2) (10)

4.2 Name each of the following welding joints:

4.2.1

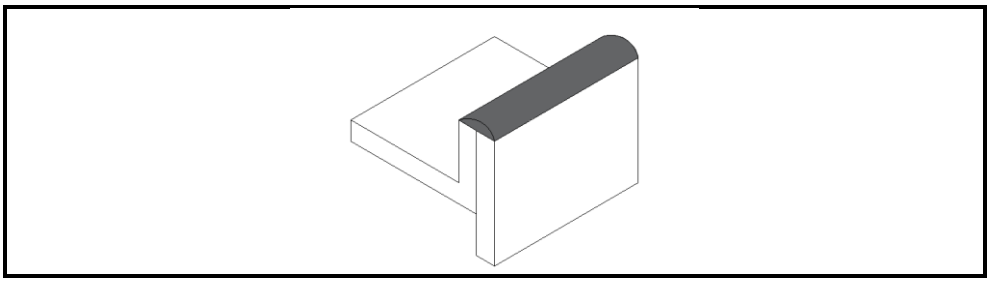

4.2.2

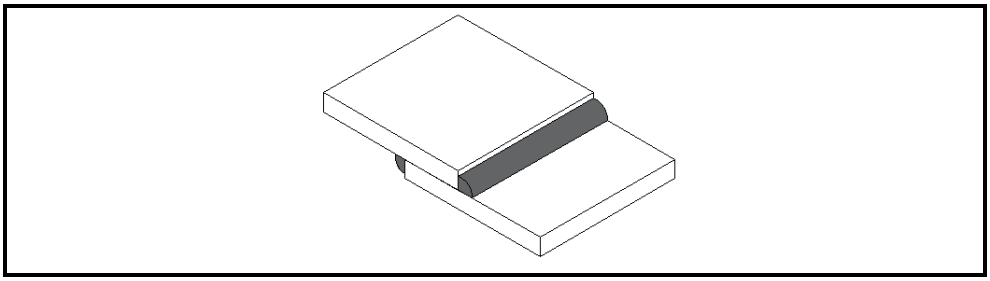

4.2.3

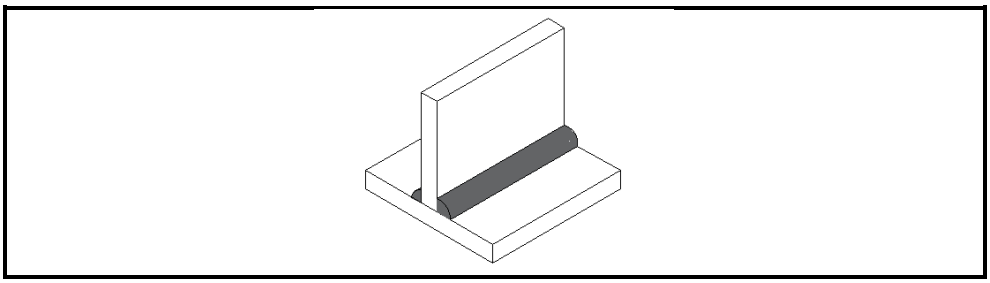

4.2.4

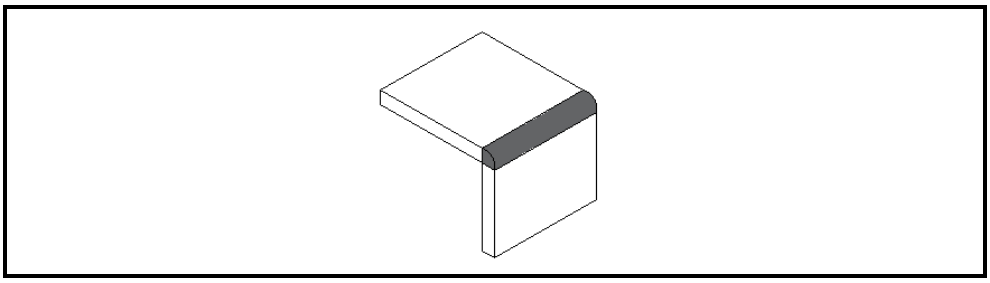

4.2.5

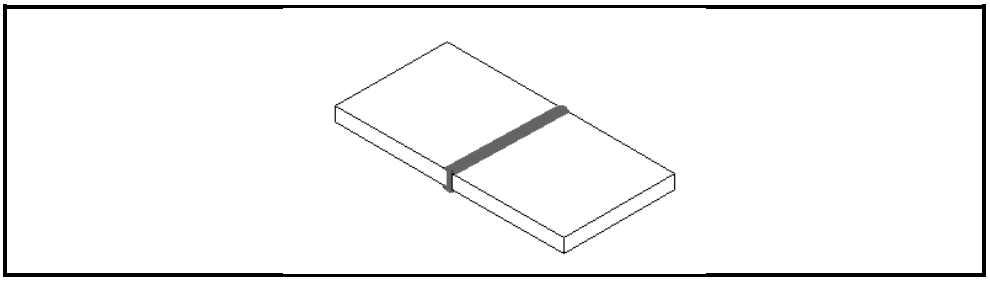

(5 × 1) (5)
[15]

TOTAL: 100

Copyright reserved