higher education & training

Department:
Higher Education and Training
REPUBLIC OF SOUTH AFRICA

MARKING GUIDELINE

NATIONAL CERTIFICATE (VOCATIONAL)

CIVIL AND STRUCTURAL STEEL WORK DETAILING
NQF LEVEL 2

16 November 2023

This marking guideline consists of 5 pages.

Copyright reserved

QUESTION 1: INTRODUCTION TO CIVIL AND STRUCTURAL STEELWORK

1.1
1.1.1 False
1.1.2 True
1.1.3 True
1.1.4 False
1.1.5 True

(5 × 1) (5)

1.2 A column is a vertical pillar or post that supports a beam in a structure, while a beam is the horizontal part of a structure. (2)

1.3
- Length
- Diameter
- Thread pitch (3)

1.4
1.4.1 NTS
1.4.2 RWP
1.4.3 conc.
1.4.4 fc.
1.4.5 rc.

(5 × 1) (5)

1.5

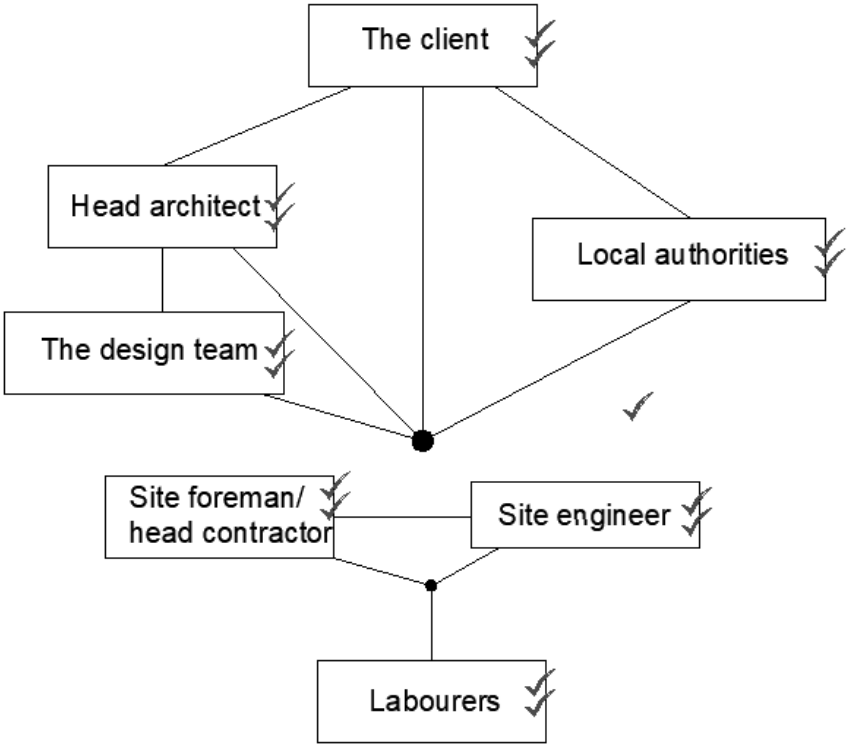

(15)

1.6

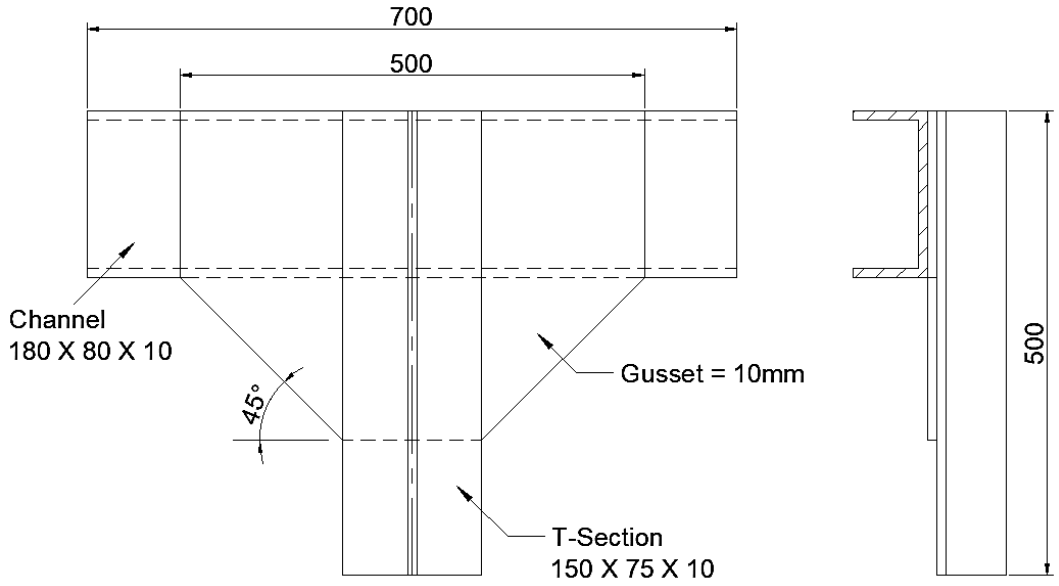

1.6.1 **1.6.2**

MARK ALLOCATION	
Orthographic correct	1
Front correct	3
End correct	3
All dimensions	1
Labels & sectioning	1
TOTAL	**10**

(10)
[40]

QUESTION 2: STRUCTURAL STEELWORK AND REINFORCED CONCRETE

2.1

2.1.1	H
2.1.2	I
2.1.3	G
2.1.4	F
2.1.5	D
2.1.6	E
2.1.7	B
2.1.8	C
2.1.9	J
2.1.10	A

(10 × 1) (10)

2.2
- Lost-foam casting
- Investment casting
- Continuous casting
- Die casting
- Sand casting (5)

2.3
- Coarse aggregate
- Fine aggregate
- Ordinary Portland cement
- Portable water
- Stone
- Sand
- Cement
- Water (Any 4 × 1) (4)

2.4 A slump test is done to test whether a concrete mix is of the right consistency. It gives an indication of how strong the concrete will be when it hardens. (2)

2.5

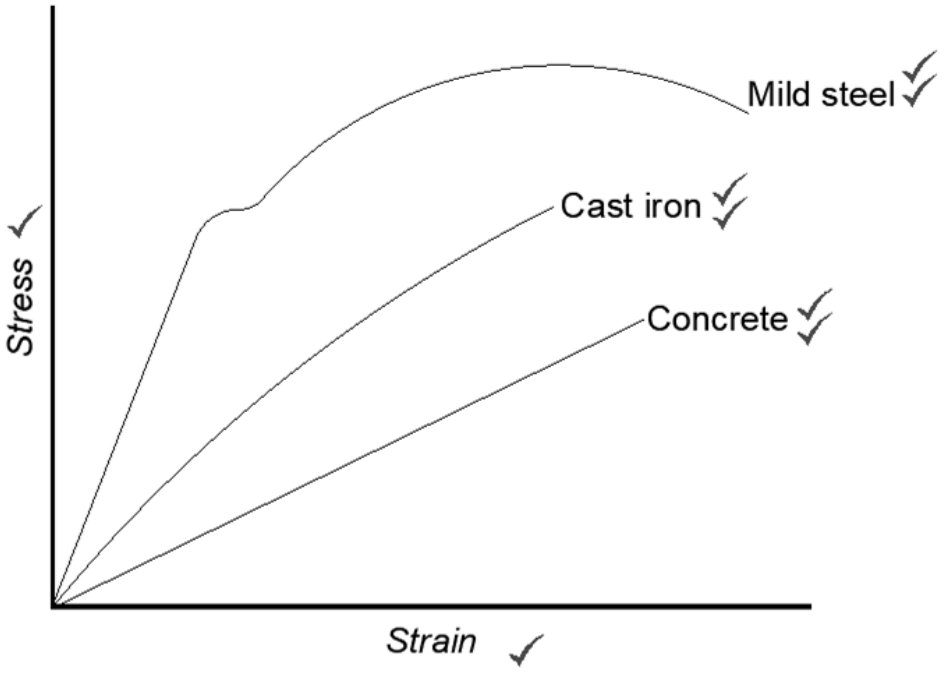

(8)
[29]

QUESTION 3: BOLTS IN STRUCTURAL STEELWORK

3.1 A bolt is a threaded fastener with a head designed to be used with a nut. (2)

3.2
- Type
- Material
- Bolt length
- Nominal diameter
- Thread pitch (Any 4 × 1) (4)

3.3
3.3.1 Bolt
3.3.2 Flat washer
3.3.3 Hole drilled 1 mm bigger
3.3.4 Tapered washer
3.3.5 Nut

(5 × 2) (10)
[16]

QUESTION 4: WELDING SYMBOLS AND JOINTS

4.1 4.1.1 Weld all round means that the parts that have to be connected must be welded completely along all of the connecting sides.

4.1.2 An included angle is the angle to be cut between the parts for the bevel or fillet weld that is being created.

4.1.3 Weld pitch is the distance between the centres of individual welds.

4.1.4 Overlap means to lay a small part of one plate on top of a small part of another plate.

4.1.5 A tack weld is made to hold parts of a welded joint in place until final welds are made.

(5 × 2) (10)

4.2
4.2.1 Edge joint
4.2.2 Lap joint
4.2.3 T-joint
4.2.4 Corner joint
4.2.5 Butt joint

(5 × 1) (5)
[15]

TOTAL: 100

Copyright reserved