higher education & training

Department:
Higher Education and Training
REPUBLIC OF SOUTH AFRICA

MARKING GUIDELINE

NATIONAL CERTIFICATE (VOCATIONAL)

CARPENTRY AND ROOF WORK
NQF LEVEL 2

17 November 2022

This marking guideline consists of 6 pages.

Copyright reserved

QUESTION 1: BASIC TOOLS AND TERMINOLOGY

1.1 1.1.1 Rip saw
1.1.2 Crosscut saw
(2 × 1) (2)

1.2
- To mark 45° angles
- To mark 90° angles
- To test for square
- To measure the depth of a mortise (Any 2 × 1) (2)

1.3 South African Bureau of Standards (1)

1.4 1.4.1 D
1.4.2 A
1.4.3 E
1.4.4 C
1.4.5 B
(5 × 1) (5)

1.5 1.5.1 A jack truss – a mono-pitch truss✓ used to form a hip✓

1.5.2 A scissors truss – a truss with sloping top✓ and bottom✓ chords

1.5.3 A truncated truss – a truss with the top cut off✓ so that other trusses can pass over it✓

1.5.4 A mono-planar truss – a truss with one slope✓ held together with nail plates✓

1.5.5 A girder truss – a strong multi-ply truss✓ used to support other trusses✓
(5 × 2) (10)
[20]

QUESTION 2: ROOF CONSTRUCTION

2.1 A flat roof (1)

2.2 Animal hides✓ and tree branches✓ (2)

2.3
- To provide shelter against bad weather
- As a means of security
- To prevent damage to belongings (3)

2.4 2.4.1 A flat roof – because of its simple construction, builders tend to use unqualified workers.

2.4.2 A mono-pitch roof – is vulnerable to strong winds.

2.4.3 A lean-to roof – requires a strong, solid fixing wall.

2.4.4 A hip roof – is very expensive to construct.

(4 × 1) (4)

2.5
- Pull the hoop iron strap tight up against the rafter.
- Bend the strap over and nail into the top of the rafter.
- Pull the hoop iron strap tightly down the opposite side.
- Nail the hoop iron firmly into the side of the rafter. (4)

2.6
- Use a proper size nail
- Nail into all the holes
- Position the clip so that you do not nail too close to the edge of the member (3)

2.7

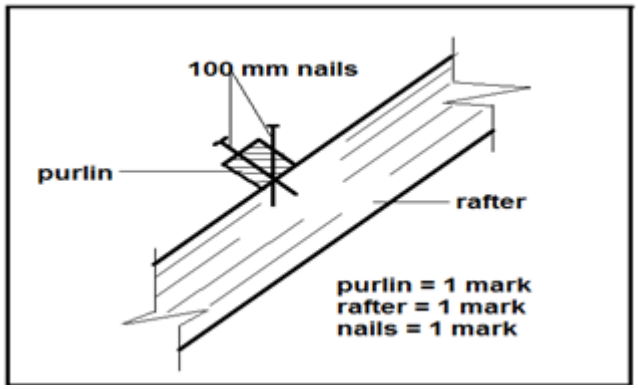

(3)

2.8
2.8.1 tilting batten
2.8.2 battens
2.8.3 spreader bar
2.8.4 carpenter
2.8.5 arsenic

(5 × 1) (5)

2.9
- There is no wastage of timber
- They are guaranteed
- They are of good quality
- They are available in any size and shape
- They comply with National Standards (5)

2.10
2.10.1 Class C
2.10.2 Class B
2.10.3 Class A

(3 × 1) (3)

2.11
- Nuts and bolts
- Wire nails (2)

2.12 2.12.1 Single-sided toothed connector
2.12.2 Double-sided toothed connector
(2 × 1) (2)

2.13
- The trusses will remain vertical
- The top and bottom chords will remain straight
- The trusses will have effective lateral support. (3)

[40]

QUESTION 3: BUILDING A HOWE TRUSS

3.1 3.1.1 truss template
3.1.2 members
3.1.3 plumb cuts
3.1.4 assemble
3.1.5 set out
(5 × 1) (5)

3.2
- Clear span – the inside distance✓ between the supporting walls✓
- Tie beam span – the distance along the bottom edge of the tie beam✓ between the heels of the truss✓ (4)

3.3 3.3.1 Run – half the tie beam span✓ the distance from the centre of the span to the outside of the wall plate✓ (2)

3.3.2 Rise – the height of a roof from the bottom of the tie beam✓ to the underside of the rafters at the apex✓ (2)

3.3.3 Pitch – the angle of a truss (1)

3.4

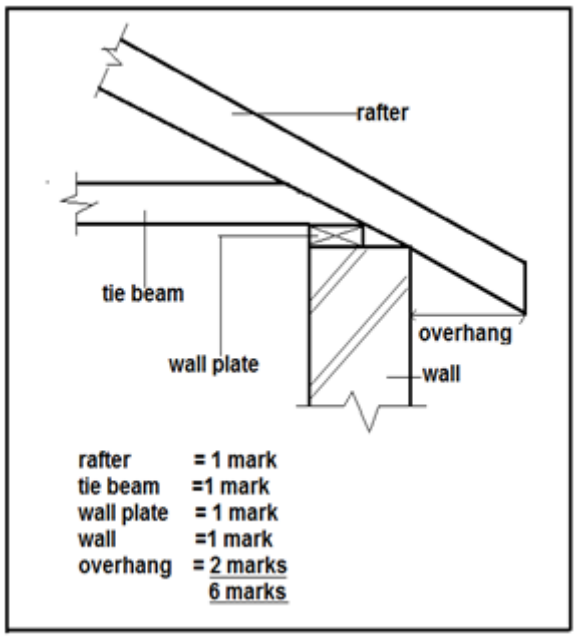

(6)

[20]

Copyright reserved

QUESTION 4: BUILDING A GABLE ROOF

4.1
- Several languages are spoken in South Africa.
- A signboard is easier for all to understand. (2)

4.2 Although ear plugs protect your eardrums against the damaging effect of loud noises,✓ you will be unable to hear sounds that spell potential danger.✓ (2)

4.3 The Occupational Health and Safety Act (1)

4.4 A roof built between two gables✓ with a truss span of not more than 6,6 metres✓ (2)

4.5 Wall plates make the bearing surface level✓ and spreads the weight of the roof over a larger area.✓ They are affixed to the top of supporting walls.✓ (3)

4.6 50 mm✓ from the inner face of gable walls✓ (2)

4.7
4.7.1 Up to 1 500 mm
4.7.2 Up to 760 mm
4.7.3 Between 850 mm and 900 mm
(3 × 1) (3)

4.8
4.8.1 True
4.8.2 False
4.8.3 False
4.8.4 False
4.8.5 False
(5 × 1) (5)
[20]

TOTAL: 100