higher education & training

Department:
Higher Education and Training
REPUBLIC OF SOUTH AFRICA

MARKING GUIDELINE

NATIONAL CERTIFICATE (VOCATIONAL)

ELECTRONIC CONTROL AND DIGITAL ELECTRONICS
NQF LEVEL 3

13 November 2024

This marking guideline consists of 6 pages.

Copyright reserved

QUESTION 1

1.1
1.1.1 True
1.1.2 True
1.1.3 False
1.1.4 False
1.1.5 True

(5 × 1) (5)

1.2
1.2.1 The energy gap in an insulator is wide, therefore no current flows.

1.2.2 The energy gap of a conductor overlaps, thereby allowing free current flow.

1.2.3 The energy gap of a semiconductor is narrow, thereby allowing controlled current to flow.

(3 × 1) (3)

1.3
1.3.1 E
1.3.2 C
1.3.3 B
1.3.4 A
1.3.5 D

(5 × 1) (5)

1.4
- Current amplification is low or none
- Voltage amplification is high
- Phase shift of input to output is 0°
- Input impedance is low
- Output impedance is high (Any 4 × 1) (4)

1.5 1.5.1
- Transformer
- Diode
- Resistor
- Capacitor (Any relevant answers) (Any 4 × 1) (4)

1.5.2
- Centre tapped transformer circuit
- The positive half wave flows from point A, through forward-bias diode D1 and is blocked by reverse-bias diode D2.
- The current then flows through load R1 and to the centre tap of the transformer.
- The negative half wave flows from point B, through forward-bias diode D2 and is blocked by reverse-bias diode D1.
- The current then flows through load R1 and to the centre tap of the transformer in the same direction as the positive half wave.
- Pulsating DC is created. (Any 5 × 1) (5)

Copyright reserved

1.6 1.6.1
(a) Channel
(b) Gate
(c) Voltage
(d) Reverse
(e) Electron

(5 × 1) (5)

1.6.2

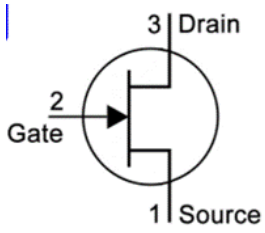

Symbol✓ Arrow direction✓ Labels✓ (3)

1.7 1.7.1 Summing operational amplifier
1.7.2 No phase difference / 0°
1.7.3 Serves as the feedback resistor
1.7.4 The three inputs will be combined or added to form one output
1.7.5 Audio mixing circuits
1.7.6 More accurate / Easy to build circuit

(6 × 1) (6)
[40]

QUESTION 2

2.1 2.1.1

1	1	1	1	1	
X 2^4	X 2^3	X 2^2	X 2^1	X 2^0	✓ ✓
16	+ 8	+ 4	+ 2	+ 1	= 31

Answer: $11111_2 = 31_{10}$✓

2.1.2

E		9	
14		9	
1110	✓	1001	✓

Answer: $E9_{16} = 11101001_2$✓

2.1.3

8	213			
8	26	r	0,625 × 8 = 5	
8	3	r	0,25 × 8 = 2	✓
	0	r	0,375 × 8 = 3	✓

Answer: $213_{10} = 325_8$✓

(3 × 3) (9)

2.2 2.2.1

$$\begin{array}{rccccc} & \checkmark & {\scriptstyle 1} & {\scriptstyle 2} & \checkmark & \\ & 1 & 0 & 0 & 1 & 1 \\ - & 0 & 0 & 1 & 1 & 0 \\ \hline & 0 & 1 & 1 & 0 & 1 \end{array}$$

Answer: 1101_2 ✓

2.2.2

$$\begin{array}{rcccc} & 1 & 1 & 1 & \\ \times & & 1 & 0 & \\ \hline & 0 & 0 & 0 & 0 \checkmark \\ & 1 & 1 & 1 & 0 \checkmark \\ \hline & 1 & 1 & 1 & 0 \\ \hline \end{array}$$

Answer: 1110_2 ✓

2.2.3

$$\begin{array}{rcccccc} & \checkmark & {\scriptstyle 1} & {\scriptstyle 1} & {\scriptstyle 1} & \checkmark & \\ & & 1 & 1 & 1 & 0 & 1 \\ + & & 0 & 1 & 1 & 1 & 0 \\ \hline & 1 & 0 & 1 & 0 & 1 & 1 \\ \hline \end{array}$$

Answer: 101011_2 ✓

(3 × 3) (9)

2.3 2.3.1

- Decade counter
- Consists of four JK flip-flops
- Uses a clock pulse to time the count in sequence
- A reset is used to zero the count if an error occurs
- The output count is taken from the Q
- At the 10th count – (1010) – the circuit resets to '0000'

(Any relevant answers) (Any 3 × 1) (3)

2.3.2 The circuits are much easier to design and build. (1)

2.3.3

- 2 bit
- Synchronous
- Upcounter

(3)
[25]

QUESTION 3

3.1

- RAM
- ROM
- Cache
- Hard drive
- CD/DVD drive, USB memory stick, etc.

(Any relevant memory devices) (5)

3.2
- Ensure that the power is switched off.
- ESD safety need to be used.
- Make sure you are familiar with the repair procedure.

(Any relevant answers) (Any 2 × 1) (2)

3.3
- Check that the mouse cable is plugged in correctly into the tower.
- Inspect the cable for damage.
- Check the mouse for physical damage.
- Check the settings for the mouse driver software.

(Any three relevant answers) (Any 3 × 1) (3)

3.4
- Release the retaining clips on the side of the DIMM sockets.
- Ease the old memory card out of the socket.
- Align the new card to the socket.
- Push the card down into the socket, allowing the clips to set into place.
- Switch on the computer and allow the BIOS to detect the new card. (5)

[15]

QUESTION 4

4.1
- Quantity being measured
- Accuracy required
- Environment where it is being used
- Type of supply
- Cost and availability (Any relevant answers) (Any 3 × 1) (3)

4.2
- A transducer acts as a sensor that monitors the state of input devices.
- It also gives feedback from the output, allowing a controlled process. (2)

4.3
- An inductive transducer uses a coil and a moving core.
- The proximity of the coil and core influences the induced supply.
- The magnitude or strength of the induced supply is used as a reference.
- A pulsed supply or changing supply frequency can also be used.

(Any relevant answers) (Any 3 × 1) (3)

4.4
- Pressure measurement
- Velocity or speed of a rotating shaft
- Movement (Any relevant answers) (Any 2 × 1) (2)

[10]

QUESTION 5

5.1
- If any changes occur, the PLC unit reacts as per its program.
- The PLC unit also monitors the output devices for any faults or irregularities. (2)

5.2
- To write a program onto the PLC
- To read the program off the PLC
- To check for errors on the PLC system (3)

5.3

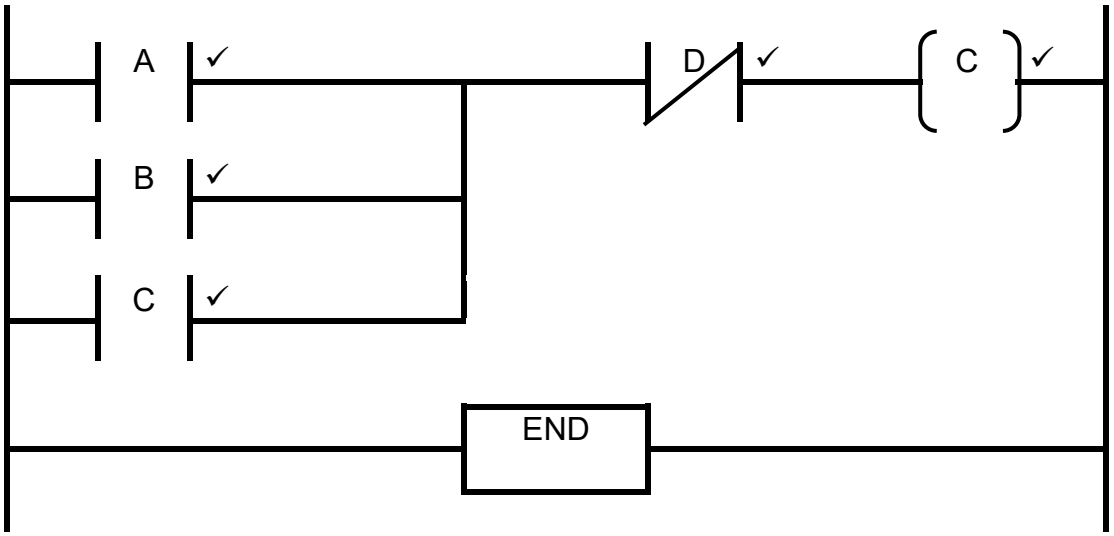

(5)
[10]

TOTAL: 100