higher education & training

Department:
Higher Education and Training
REPUBLIC OF SOUTH AFRICA

MARKING GUIDELINE

NATIONAL CERTIFICATE (VOCATIONAL)

ELECTRONIC CONTROL AND DIGITAL ELECTRONICS
NQF LEVEL 4

12 November 2024

This marking guideline consists of 6 pages.

Copyright reserved

QUESTION 1

1.1 1.1.1 $X_L = 2\pi f L$

$X_L = 2\pi \times 50 \times (110 \times 10^{-3}) = 34.557\ \Omega$ ✓

$X_C = \dfrac{1}{2\pi f C}$

$X_C = \dfrac{1}{2\pi \times 50 \times (20\times10^{-6})} = 159.154\ \Omega$ ✓

$I_L = \dfrac{V_T}{X_L} = \dfrac{100}{34.557} = 2.893\ A$✓

$I_C = \dfrac{V_T}{X_C} = \dfrac{100}{159.154} = 0.628\ A$✓ (4)

1.1.2 $I_T = \sqrt{I_L^2 + I_C^2}$ ✓

$I_T = \sqrt{2.893^2 + 0.628^2} = 2.960\ A$✓ (2)

1.1.3 $Z_T = \dfrac{V_T}{I_T} = \dfrac{100}{2.960} = 33.783\ \Omega$ ✓ (1)

1.1.4

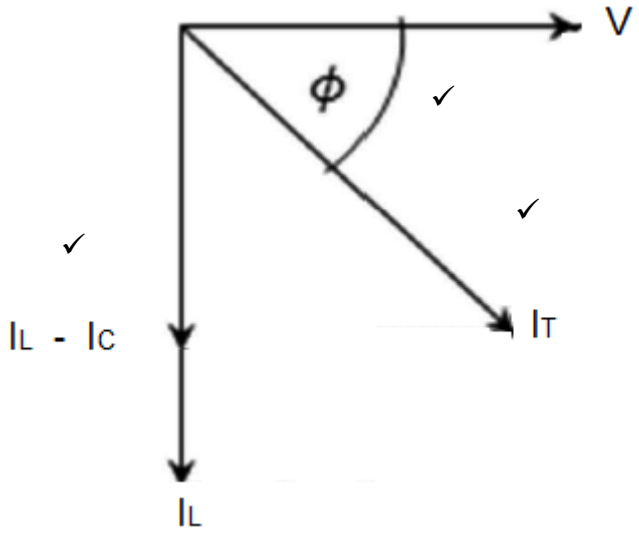

(3)

1.2 1.2.1 In any circuit or system under excitation, the frequency at which a pair of reactive components cancel resulting in a natural mode. (2)

1.2.2 $Z = R$✓
$\cos\theta = 1$✓
$X_L = X_C$✓ (3)

1.3 1.3.1 C
1.3.2 C
1.3.3 C
1.3.4 D
1.3.5 C

(5 × 1) (5)
[20]

QUESTION 2

2.1
- Reset
- Trigger
- Output
- Discharge
- Ground
- Vcc
- Control voltage
- Threshold (5)

2.2
- Colpitts uses two capacitors, centre-tapped to ground in parallel with an inductor.
- Hartley uses two inductors, centre-tapped to ground in parallel with a capacitor. (2)

2.3 $L_T = L_1 + L_2$ ✓

$L_T = (750\times10^{-6}) + (550\times10^{-3})$

$L_T = 550.75\times10^{-3}$ H ✓

$F_R = \frac{1}{2\pi\sqrt{L_T C}}$ ✓

$F_R = \frac{1}{2\pi\sqrt{(550.75\times10^{-3})\times(150\times10^{-12})}}$ ✓

F_R = 17.510 kHz ✓ (5)

2.4 2.4.1 40 mA (1)

2.4.2 7 V (1)

2.4.3
- Saturation mode
- Cut-off mode (2)

2.4.4 Active region occurs when the base-emitter junction is forward biased✓ and base-collector junction is reverse biased.✓ (2)

2.4.5 Cut-off region (1)

Copyright reserved

2.5

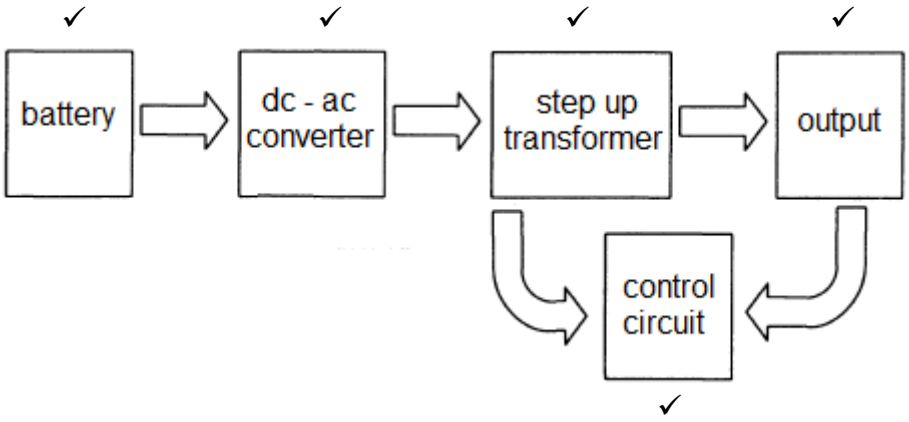

✓ ✓ ✓ ✓ ✓ (5)

2.6 2.6.1

- Phase control
- Battery chargers
- Inverters
- Motor speed control (Any relevant answer) (4)

2.6.2

- Current reduction
- Forced commutation (2)

[30]

QUESTION 3

3.1 3.1.1

- An open primary winding, open fuse or open switch
- Replace the transformer or fuse, ensure switch is closed

3.1.2

- An open secondary winding
- Replace the transformer

3.1.3

- An open rectifier circuit
- Replace the rectifier

3.1.4

- Resistor burned/open circuit
- Replace the resistor

3.1.5

- Zener diode is open
- Replace the Zener diode

(5 × 2) (10)

3.2 3.2.1

- C1
- Zener diode
- D3 (1)

3.2.2 A Removes fluctuations (DC ripple) in the rectified voltage
B Maintains a constant output voltage

(2)

3.3

Components	Quantity	
Diode general purpose	4	✓
Diode zener	1	✓
Capacitor (polarised)	1	✓
Resistor	1	✓
Fuse	1	✓
Transformer	1	✓
Switch	1	✓

(7)
[20]

QUESTION 4

4.1
4.1.1 D
4.1.2 A
4.1.3 E
4.1.4 C
4.1.5 B

(5 × 1) (5)

4.2

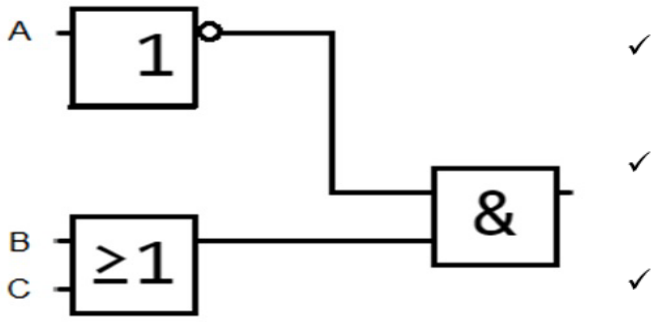

✓ ✓ ✓

(3)

4.3 1111 0100 1101 (2)

4.4
- Stores data
- Moves data (1)

4.5
- Usability
- Functionality
- Productivity
- Compatibility (4)

[15]

QUESTION 5

5.1	5.1.1	True		
	5.1.2	True		
	5.1.3	True		
	5.1.4	False		
	5.1.5	False		
	5.1.6	True		
			(6 × 1)	(6)
5.2	5.2.1	• Output Q1 is off • Stop indicator is on • Run indicator is off		(3)
	5.2.2	• Q1 is energized • Stop indicator is off • Run indicator is on		(3)
	5.2.3	• Q1 is de-energized • Stop indicator is on • Run indicator is off		(3)
				[15]
			TOTAL:	**100**

Copyright reserved