higher education & training

Department:
Higher Education and Training
REPUBLIC OF SOUTH AFRICA

MARKING GUIDELINE

NATIONAL CERTIFICATE (VOCATIONAL)

ELECTRONIC CONTROL AND DIGITAL ELECTRONICS
NQF LEVEL 2

12 November 2024

This marking guideline consists of 6 pages.

Copyright reserved

QUESTION 1

1.1
1.1.1 C
1.1.2 B
1.1.3 C
1.1.4 B
1.1.5 A

(5 × 2) (10)

1.2
1.2.1 D
1.2.2 E
1.2.3 F
1.2.4 C
1.2.5 A

(5 × 1) (5)

1.3
- Physical size and pin arrangement
- Coil voltage rating
- Coil resistance rating
- Switch contact rating (voltage and current)
- Switch contact arrangement (SPDT and DPDT)

(5 × 1) (5)
[20]

QUESTION 2

2.1

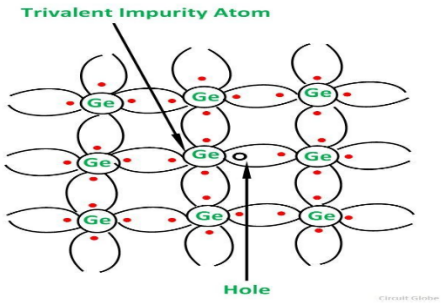

Allocate 2 marks for any correct crystal structure, 1 mark for the impurity and 1 mark for the correct atom

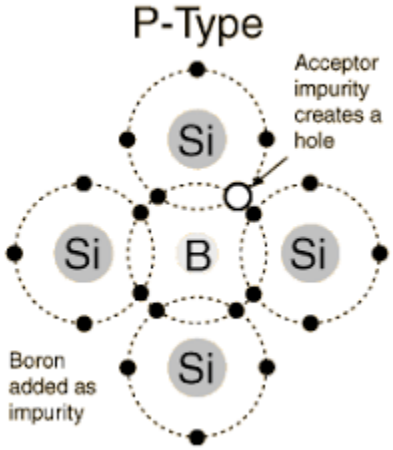

Allocate 2 marks for any correct crystal structure, 1 mark for the impurity and 1 mark for the correct atom (4)

2.2 2.2.1 Conductors are elements with fewer than four valence electrons.

2.2.2 Insulators are atoms with exactly eight valence electrons.

(2 × 1) (2)

2.3
- Zener diode✓ – used as voltage references or voltage regulators.✓
- Light emitting diode (LED)✓ – used in security systems, optical encoders, level indicators, high voltage isolators, alphanumeric displays and remote controls.✓ (2 × 2) (4)

2.4 A PNP transistor works when the base of the transistor is made more negative than the emitter✓ and the collector is much more negative than that of the base;✓ the transistor will be forward biased.✓ A small current will flow from the emitter to the base and a much higher current will flow from the emitter to the collector.✓ If the voltage applied to the base is more positive than -0,6 V, the transistor turns off.✓ (5)

Copyright reserved

2.5
- Op-amps are small in size
- The are cheap
- They have low power consumption
- They are highly stable
- They are highly reliable (Any 2 × 1) (2)

2.6 2.6.1 Capacitor

2.6.2 Rectifier or doide or PN junction device (2 × 1) (2)

2.7
- Select a low ohm scale on the meter.
- Connect the positive lead to the anode and the negative to the cathode of the diode.
- This will forward bias the diode.
- A value will appear on the display.
- When the negative lead is connected to the anode and the positive lead to the cathode, the diode will be reversed biased.
- The reading on the meter will now indicate an open line (OL).
- If these readings are not indicated as such, then the diode is faulty. (6)

[25]

QUESTION 3

3.1 Analogue signals are continuous electrical signals that vary in time✓ and in digital systems; the signals have two discrete values.✓

OR

Analogue signals have values at every time instance,✓ while digital signals have values at specific time instances.✓ (2)

3.2 For TTL logic gates, any voltage between 0 V and 0,8 V✓ represents a 'low' (0)✓ and any voltage between 2 V and 5 V ✓represents a 'high' (1)✓. The voltage values between 0,8 V and 2 V are unacceptable✓and there is no logic level defined for these voltage levels.✓ (6)

3.3 $1\ 0\ 1\ 1\ 1 = 2^4 2^3 2^2 2^1 2^0$✓
$= (16 \times 1) + (8 \times 0) + (4 \times 1) + (2 \times 1) + (1 \times 1)$✓
$= 23_{10}$✓ (3)

3.4
$1\ 1\ 0\ 1$
$1\ 0\ 1\ 1 \rightarrow 0\ 1\ 0\ 0$✓
$+\quad 1$✓
$0\ 1\ 0\ 1$✓
$1\ 1\ 0\ 1$
$0\ 1\ 0\ 1$
$0\ 0\ 1\ 0$✓✓ (5)

3.5

A	B	L
0	0	1✓
0	1	1✓
1	0	1✓
1	1	0✓

(4)

3.6 3.6.1

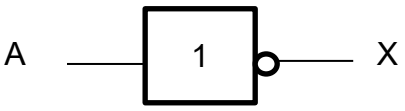

3.6.2

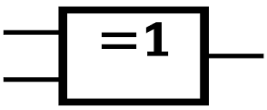

3.6.3

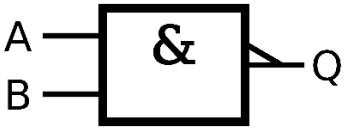

(3 × 1) (3)

3.7

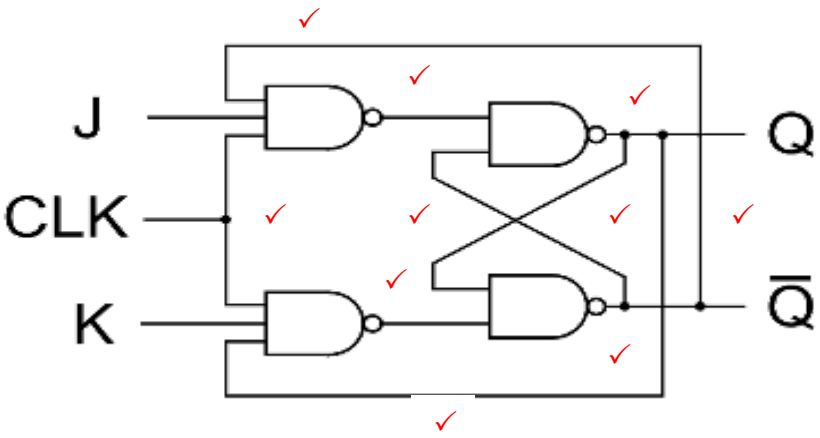

(10)

3.8
- RS flip flop
- JK flip flop
- D-type flip flop
- T-type flip flop

(Any 2 × 1) (2)
[35]

QUESTION 4

4.1
- PS/2 port
- VGA port
- RJ – 45 port
- Universal serial bus (USB) (4)

4.2
- Central processing unit
- Motherboard
- Power supply
- Memory (4)

4.3
- Magnetic disks
- Optical disks
- Flash memory (Any 2 × 1) (2)

[10]

QUESTION 5

The liquid is enclosed in a tall, narrow glass column✓ with a constant cross-sectional area.✓ As the temperature of the liquid in the thermometer increases,✓ its volume increases.✓ The increase in volume results in a change in the height of the liquid in the column.✓ The increase in volume and the height of the liquid✓ is proportional to the increase in temperature.✓ The relationship between the temperature and the height of the liquid is linear✓ over the small temperature range for which the thermometer is used.✓✓ **[10]**

TOTAL: 100

Copyright reserved