higher education & training

Department:
Higher Education and Training
REPUBLIC OF SOUTH AFRICA

MARKING GUIDELINE

NATIONAL CERTIFICATE (VOCATIONAL)

ELECTRICAL WORKMANSHIP
NQF LEVEL 4

20 November 2024

This marking guideline consists of 8 pages.

Copyright reserved

QUESTION 1

1.1 1.1.1 Insulated
1.1.2 Current
1.1.3 30 mA
1.1.4 Haemorrhage
1.1.5 Overheating OR overloading

(5 × 1) (5)

1.2 1.2.1
- Electrocution
- Cuts
- Bruises
- Crushing
- Death from moving machine parts
- Loss of limbs
- Burns
- Fires and explosions
- Chemical exposure

(Any 2 × 1) (2)

1.2.2
- Handle or store grinding wheels carefully.
- Visually inspect grinding wheels.
- Check wheel mounting flanges.
- Use wheel mounting spacers.
- The tool rest must be 3 mm from the grinding wheel.
- Use safety guard covers.
- Do a test run on a newly-fitted grinding wheel.
- Firmly hold the workpiece and place it on the tool rest.
- Do not apply too much pressure to the workpiece against the grinding wheel.
- Move the workpiece back and forth across the grinding wheel surface.
- Check for grooves worn into the grinding wheel surface.
- Dress the grinding wheel regularly with a dressing tool.
- Cool down the workpiece in water.
- Use PPE at all times.

(Any 2 × 1) (2)

1.3
- Moving parts, rotating, sliding, reciprocating
- Entanglement or trapping of hair, clothing or jewellery
- Friction or abrasion
- Cutting or shearing
- Puncturing
- Impact
- Crushing

(Any 4 × 1) (4)

Copyright reserved

1.4 1.4.1 False
1.4.2 False
1.4.3 True
1.4.4 True

(4 × 1) (4)

1.5
- Supply written safety operating procedures to employees.
- Apply job rotation to restrict long working hours on difficult jobs.
- Make sure that employees are well-trained in operating procedures.
- Do risk assessments.
- Increase safety awareness signage.
- Keep strict updated records of all incidents. (Any 3 × 1) (3)

[20]

QUESTION 2

2.1 2.1.1 Circuit breaker
2.1.2 Ripple relay
2.1.3 Geyser/H.W.C. isolator, double-pole isolator, DPST isolator
2.1.4 Geyser/H.W.C. element
2.1.5 Geyser/H.W.C. thermostat

(5 × 1) (5)

2.2
- Power source/supply,✓ i.e. battery, DC, alternating current, AC, solar, invertor (any one of these)
- Conductors,✓ i.e. wires, cables (any one of these)
- Control devices,✓ (any kind of switching device or component)
- Load,✓ i.e. light, motor, element, appliance (any kind of acceptable load) (4)

2.3

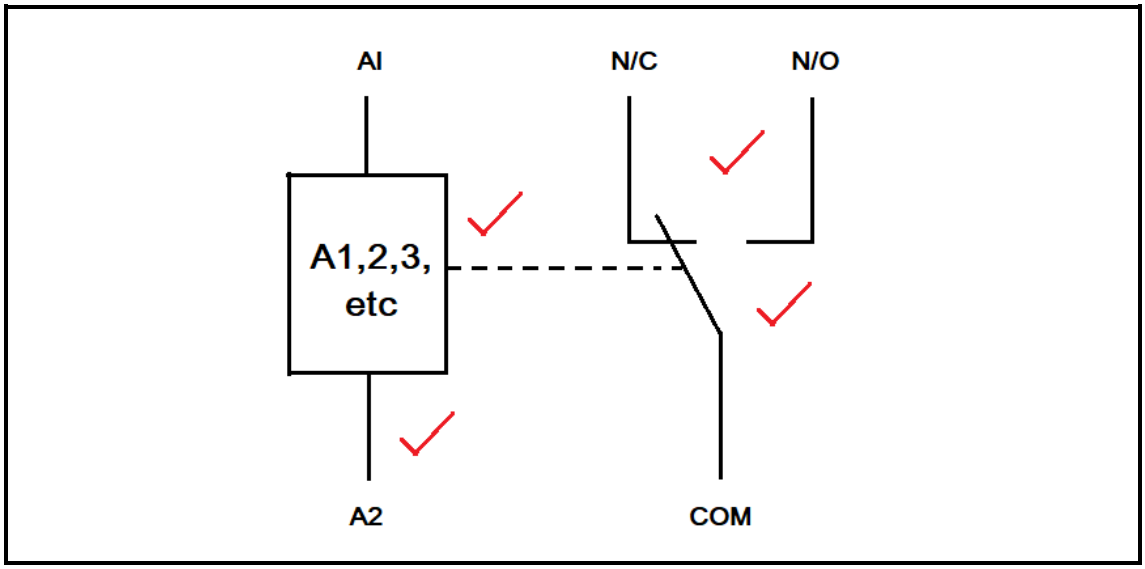

Coil correct symbol and labels 2 marks
Change over contact correct and labels 2 marks
(4 × 1) (4)

2.4

$$Sp = \frac{\sqrt{(I^2 \times t)}}{k}$$

$$30 = \frac{\sqrt{(2500^2 \times t)}}{96} \checkmark$$

$$30 \times 96 = \frac{\sqrt{(2500^2 \times t)}}{1} \checkmark$$

$t = \frac{(30 \times 96)^2}{(2\,500)^2}$ ✓

$t = \frac{8\,294\,400}{6\,250\,000}$ ✓

t = 1,33 seconds ✓

OR

$I_{fc} = \frac{CIF \times A}{\sqrt{t}}$

$\sqrt{t} = \frac{96 \times 30}{2\,500}$ ✓

$t = \frac{(96 \times 30)^2}{(2\,500)^2}$ ✓

$t = \frac{(2\,880)^2}{(2\,500)^2}$ ✓

$t = \frac{8\,294\,400}{6\,250\,000}$ ✓

t = 1,33 seconds ✓

(5 × 1) (5)

2.5

- Melting of insulation due to heat.
- Conductors can melt together.
- Fire due to sparks and heat.
- Busbar damage, buckling/bending.
- Power system unstable, can shut down.
- Can damage other equipment in the system.

(Any 2 × 1) (2)

[20]

QUESTION 3

3.1 3.1.1 The amount of total light emitted in all directions from a light source.

3.1.2 How bright a lamp appears to be **OR** the brightness of a lamp

(2 × 1) (2)

3.2

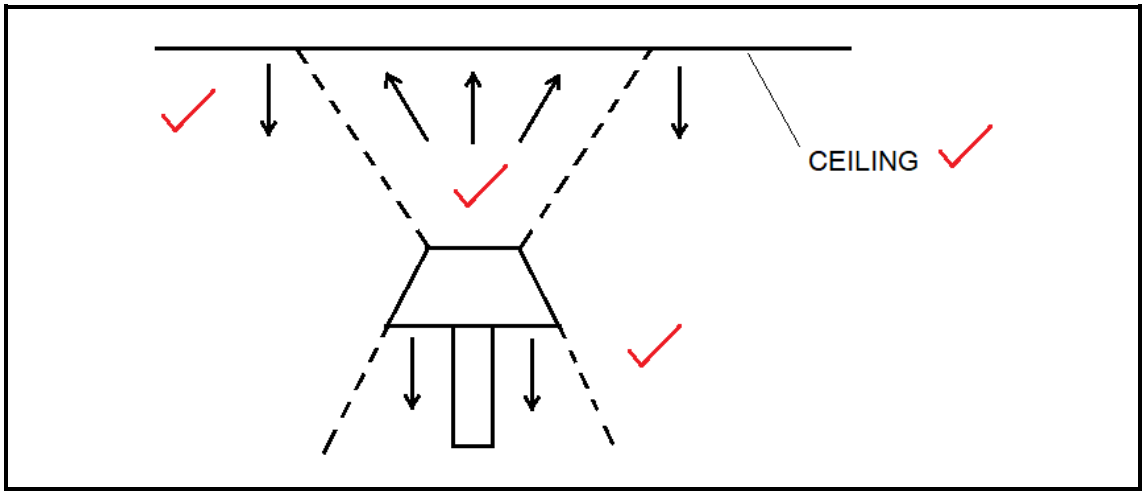

(4 × 1) (4)

3.3 3.3.1 D
3.3.2 A
3.3.3 C
3.3.4 B
(4 × 1) (4)

3.4 3.4.1 Filament lamps
3.4.2 Arc lamps
3.4.3 Discharge lamps
(The answers can be in any order) (3 × 1) (3)

3.5 3.5.1
- Low initial cost
- Light or lamp starts instantly
- Can be used with light dimmers
- Available in different shapes, sizes, colours and wattages (any one of these)
- Easy to install and operate (Any 2 × 1) (2)

3.5.2
- Contains mercury
- Lamps need a ballast
- Less brightness
- Initially more expensive
- High maintenance cost (Any 2 × 1) (2)

3.6 3.6.1 Stroboscopic effect (1)

3.6.2
- Use of twin lamp fittings✓one lamp with a capacitor connected in series with the ballast and the other lamp is connected with the ballast only.✓
  OR
- Use single lamp fittings✓ connected across alternative three-phase supply phases. ✓ (Any 1 × 2) (2)

[20]

QUESTION 4

4.1
- Circuit continuity tests
- Polarity tests
- Earth-continuity tests
- Insulation resistance tests
- Voltage tests (Any 4 × 1) (4)

4.2 4.2.1

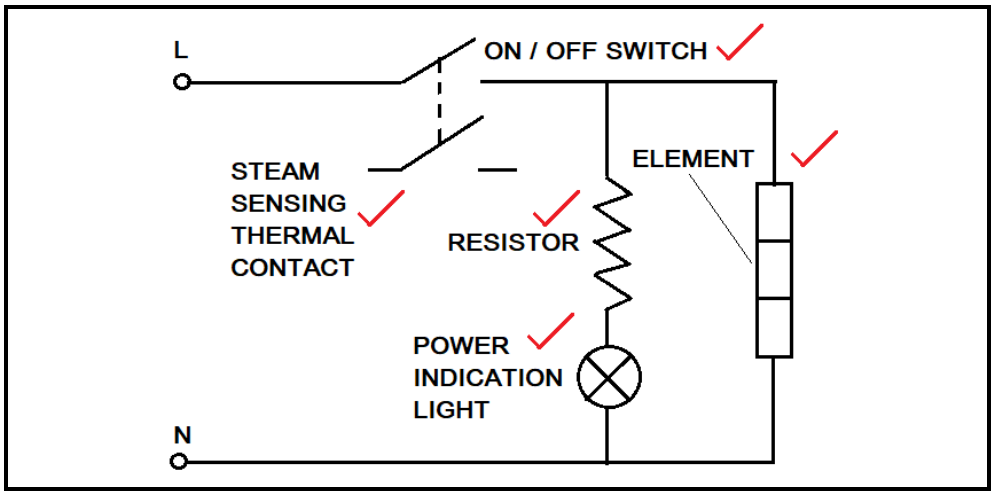

Circuit diagram correct 3 marks
Any two labels 1 mark each
(Any similar correct circuit diagram) (5)

4.2.2

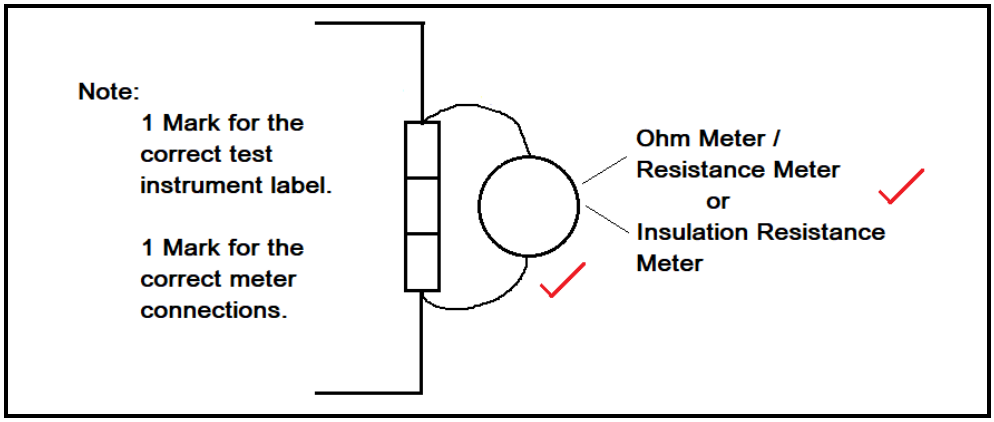

(2 × 1) (2)

4.3 4.3.1 E
4.3.2 D
4.3.3 A
4.3.4 B

(4 × 1) (4)

4.4
- Loosen the casing screws and remove the one loose casing.
- Disconnect the switch or control module wiring.
- Unscrew or unclip the switch/control module.
- Fit the new component and wiring.
- Refit the casing cover. (Or any other logical correct explanation) (5 × 1) (5)

[20]

QUESTION 5

5.1
- Electrical supply
- Proper motor-sizing
- Site survey
- Environmental conditions
- Damage inspection of machines/motors
- Motor cleanliness
- Motor lubrication
- Installation foundations
- IP rating

(Any 2 × 1) (2)

5.2 5.2.1 Short-shunt universal motor (1)

5.2.2

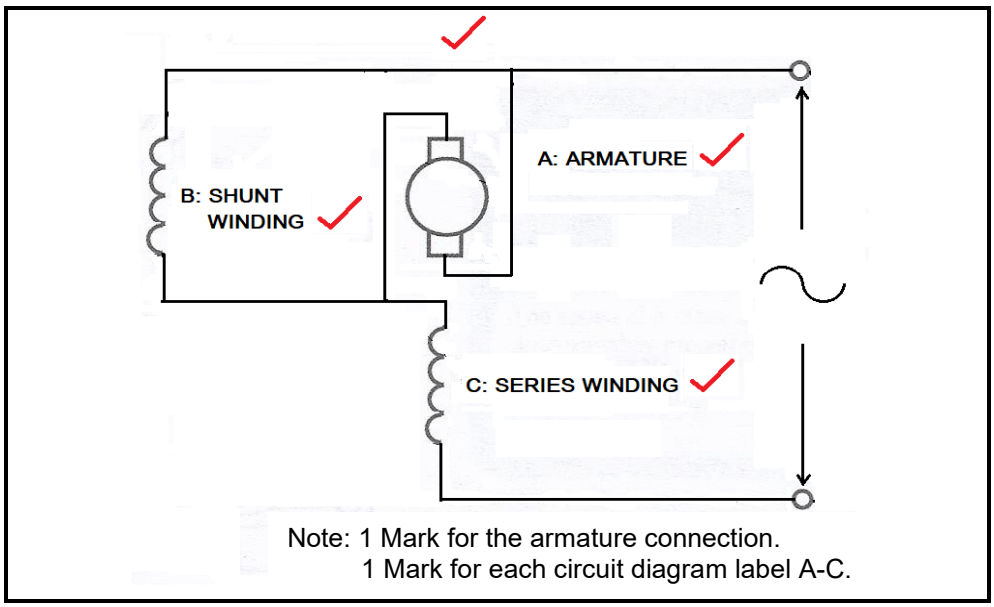

Note: 1 Mark for the armature connection.
1 Mark for each circuit diagram label A-C.

(4 × 1) (4)

5.2.3
- Select the AC or DC voltage scale on the multimeter/voltmeter.
- Connect one lead of the meter to the armature supply terminal and the other meter lead to the field coils supply terminal.

(Or any other basic logical correct answer) (2 × 1) (2)

Copyright reserved

5.3
- The disassembly area must be clean.
- Label or tag all wiring and connection points.
- Make notes and sketches.
- Clean the exterior motor surfaces.
- Inspect all leads/wiring for damage/wear and tear.
- Check the motor frame for cracks or damage.
- Turn the motor by hand, checking that it turns freely.
- Check the motor shaft alignment.
- Check the motor shaft free play on the bearings.
- Check the motor shaft end play.
- Draw up a list of all the motor parts.
- Always remember to do good housekeeping. (Any 3 × 1) (3)

5.4
- Short-circuit and open-circuit test or continuity test
- Insulation resistance between windings and components
- Insulation resistance between windings, components to earth
- Run winding test
- Start winding test
- A capacitor test
- Test the centrifugal switch (4 × 1) (4)

5.5
- Unbolt/unscrew the motor endplate bolts.
- Remove the endplates and armature.
- Use a bearing puller to remove the bearings from the endplates.
- Replace the bearings and reassemble the motor.

(Or any other logical correct explanation) (4 × 1) (4)
[20]

TOTAL: 100

Copyright reserved