higher education & training

Department:
Higher Education and Training
REPUBLIC OF SOUTH AFRICA

MARKING GUIDELINE

NATIONAL CERTIFICATE (VOCATIONAL)

ELECTRICAL SYSTEMS AND CONSTRUCTION
NQF LEVEL 4

22 November 2024

This marking guideline consists of 6 pages.

Copyright reserved

QUESTION 1

1.1 1.1.1 True
1.1.2 True
1.1.3 False
1.1.4 False
1.1.5 False
1.1.6 True
1.1.7 False
1.1.8 True
1.1.9 True
1.1.10 False

(10 × 1) (10)

1.2 1.2.1 The maximum current the equipment can handle over a specified short time.

1.2.2 The maximum current the circuit breaker can handle immediately after closing.

1.2.3 The frequency at which the switchgear is designed to operate.

1.2.4 The amount of protection that the enclosure provides for the switchgear inside.

(4 × 1) (4)

1.3
- Damage caused by the alternator rotor spinning out of control.
- Damage caused by excessive torque being applied to the alternator.

(2 × 1) (2)

1.4 They drive a generator when steam is applied to them. (1)

1.5
- Condensers
- Cooling water
- Cooling towers

(3 × 1) (3)

[20]

QUESTION 2

2.1 2.1.1 Fuse disconnector

2.1.2 Contactor

2.1.3 Two-pole circuit breaker

2.1.4 Polarised capacitor

2.1.5 Step-down transformer

(5 × 1) (5)

Copyright reserved

2.2

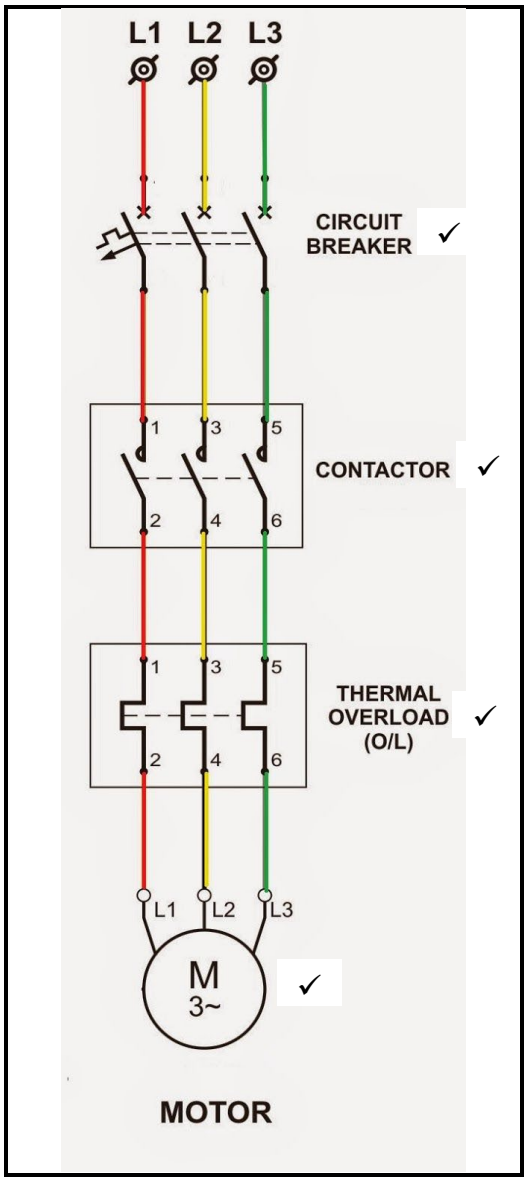

(ONE mark for each correct component) (4)

2.3

- Wire stripper
- Screwdriver
- Pliers
- Tube spanner
- Side cutter

(Any 4× 1) (4)

2.4

- Wiring diagram
- Schematic diagram
- Pictorial diagram

(Any 2 × 1) (2)

[15]

QUESTION 3

3.1 3.1.1 He should have ensured that his employee is not exposed to any risk or hazard for his health and safety. (1)

3.1.2
- He must take steps to eliminate any hazard or danger.
- He must test to ensure that the installation or equipment is properly isolated.
- He must take steps to ensure his own safety and safety of others.

(Any 2 × 1) (2)

3.2
- The sequence in which the construction will take place.
- Preliminary work, such as clearing vegetation and arranging access.
- The days and times that workers will be able to enter the property.
- Where materials will be stored and how traffic will move across the site.
- What needs to be done at the end of the work to clean up.

(5 × 1) (5)

3.3
- Electrical requirements
- Mechanical requirements
- Environmental requirements

(3 × 1) (3)

3.4
- Terrain
- Obstacles
- The spacing between poles
- Number of conductors to be carried

(Any 3 × 1) (3)

3.5
- Conductors stretch over time
- Conductors expand and shrink

(Any 1 × 1) (1)

[15]

QUESTION 4

4.1 4.1.1 Used to protect insulators from the damage caused by arcing✓ in cases of lightening strikes and other voltage surges. ✓

4.1.2 Information connections which allow the utility that manages the switchyard✓ to monitor performance and detect faults, using a Power Line Communication Carrier (PLCC). ✓

4.1.3 The physical path to gain access to components✓ inside a switchyard. ✓

(3 × 2) (6)

4.2
- Review the legend to make sure you understand the symbols.
- Understand wiring diagrams.
- Pay attention to which items are phased or grouped together.
- Look at the lighting plan.
- Read the specifications.

(5 × 1) (5)

4.3
- It breaks the flow of the current, ✓
- which will cause any machinery to stop immediately. ✓ (2)

4.4 4.4.1 To check the amperage or to measure current in a circuit.

4.4.2 Measures and analyses the impedance of circuits and components.

4.4.3 To determine the exact location of a cable failure.

(3 × 1) (3)

4.5 4.5.1 To proof that the electrical work on the property complies with the South African National Standards✓ as stipulated in the Electrical Installations Occupational Health and Safety Act. ✓ (2)

4.5.2
- Chief inspector, or any accredited person.
- Single-phase tester (for single-phase only).
- Installation electrician (single-phase and three-phase, excluding hazardous areas).
- Master electrician.

(Any 2 × 1) (2)

[20]

QUESTION 5

5.1 5.1.1 To detect an abnormal condition within the tank✓ and send an alarm or trip signal. ✓ (2)

5.1.2 It means there is presence of moisture in the transformer. (1)

5.1.3
- Fill up the cooling oil and correct the oil leak if necessary.
- Replace the Buchholz relay if necessary.
- Replace the insulating material if necessary. (3)

5.2 It is helpful to locate the source of malfunction or the source of the fault. (1)

5.3
- The solution might not work (time and money wasted).
- People may be injured or inconvenienced (some solutions are more risky).
- Damage to the environment (including debris, noise and smells).
- Risk to equipment, including wear and tear, and accidents.
- Risk to the quality of the electrical system (will it be as good as it was before?)
- Risk to the equipment or processes that the system is intended to support.

(Any 4 × 1) (4)

5.4 5.4.1 It is the small circuit used to control the operation of the motor. (1)

5.4.2
- They are less expensive than single-phase.
- Has a simple design.
- Has high starting torque.
- Has high efficiency.

(Any 2 × 1) (2)

5.4.3 To drive equipment such as conveyors, ✓ fans, compressors and pumps. (1)

[15]

QUESTION 6

6.1 6.1.1 Bypass diodes
6.1.2 Battery discharge depth/BDD
6.1.3 AC isolator
6.1.4 Photovoltaic/PV
6.1.5 Geographical location

(5 × 1) (5)

6.2
- They are expensive.
- They require more maintenance than fixed systems.
- They require a more experienced person to install them. (3)

6.3
- Inverters
- Charge controllers
- Bypassing diodes (3)

6.4 6.4.1 Number of panels in series= 300 ÷ 19✓
= 15,789
= 16 panels✓ (2)

6.4.2 Groups of panels in parallel = 16 ÷ 8✓
= 2 groups of parallel panels✓ (2)

[15]

TOTAL: 100

Copyright reserved