higher education & training

Department:
Higher Education and Training
REPUBLIC OF SOUTH AFRICA

MARKING GUIDELINE

NATIONAL CERTIFICATE (VOCATIONAL)

ELECTRICAL SYSTEMS AND CONSTRUCTION
NQF LEVEL 3

21 November 2024

This marking guideline consists of 6 pages.

Copyright reserved

QUESTION 1

1.1
- Shock current
- Over-current
- Fault current
- Over-voltage
- Under-voltage
- Excessive temperature
- Electric arc

(Any 4 × 1) (4)

1.2
1.2.1 Distribution board
1.2.2 2,2 m
1.2.3 Switch disconnector
1.2.4 Enclosure
1.2.5 1,2 m
1.2.6 0,2 m

(6 × 1) (6)

1.3 1.3.1

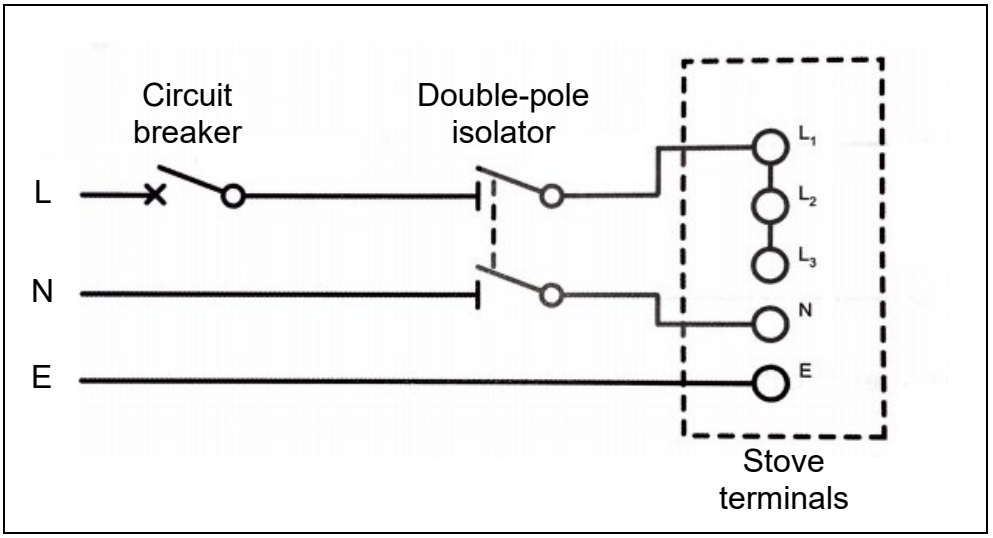

Circuit diagram (2 × 1)
Labels (Any 6 × ½) (5)

1.3.2
- The cable should be able to carry the current load imposed on it without heating
- The permissible voltage

(2)

1.4
- Numbered parts
- Measured parts

(2)

1.5 1.5.1 These can open on one side to allow the wire to be placed without feeding it through.✓ These wireways offer easy access for the installation and maintenance of cables and conductors.✓

1.5.2 The wire must be pulled or fed through the wireway.✓ They are also called sectional or pull-through wireways.✓

(2 × 2) (4)

Copyright reserved

1.6
- It corrodes or rusts easily
- It is more expensive than PVC conduit
- It is time consuming to install (Any 2 × 1) (2)

[25]

QUESTION 2

2.1 2.1.1
- Surface-mounted distribution boards
- Flush-mounted distribution boards (2)

2.1.2
- Main switch
- Earth leakage unit
- Surge protection device
- Circuit breakers (Any 3 × 1) (3)

2.2 A system that provides sufficient illumination✓ to replace the existing safety and normal lighting system in the event of a power failure.✓ (2)

2.3
2.3.1 10 A
2.3.2 1,1 Ω
2.3.3 20 A
2.3.4 0,55 Ω

(4 × 1) (4)

2.4

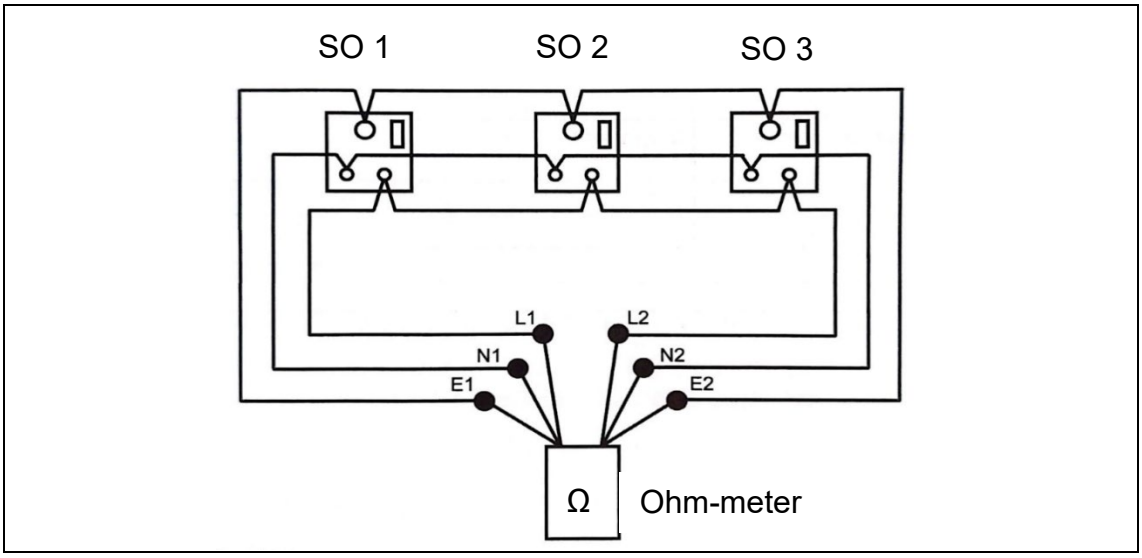

Wiring diagram (3 × 1)
Connection of meter (3 × 1) (6)

2.5
- Dimmer switches
- Touch switches
- Time delay devices
- Power controllers
- Electronic starters for fluorescent lamps
- Earth leakage units
- Surge arrestors (Any 5 × 1) (5)

2.6 V_{drop} = $V_{supply} \times 5\%$✓
= $230 \times 5\%$
= 11, 5 V✓ (2)

2.7 The test button on an earth leakage unit is used to confirm that the electronic components within the trip mechanism are operating correctly. (1)
[25]

QUESTION 3

3.1
- Can any body part get caught in or between objects?
- Can the worker slip, trip or fall?
- Do tools, machines or equipment present any hazards?
- Can the worker make contact with harmful objects?
- Can the worker suffer strain from lifting, pushing or pulling?
- Is there any excessive noise?
- Does the danger of falling objects exist?
- Is there sufficient lighting?
- Can weather conditions affect safety?
- Is there dust, fumes or vapour in the air?
- Is the worker exposed to extreme cold or heat? (Any 4 × 1) (4)

3.2
- The fuse should fit snugly in the fuse holder
- Clean corroded fuse holders or replace badly corroded holders
- Never use a piece of wire as a substitute for a fuse
- Never replace a fuse with a higher current rating, a lower voltage rating or a slower time delay rating
- Obtain for correct fuse type as specified in service manual of equipment
- Before installing the replacement fuse, ensure that it is of the proper type and fits correctly
- If a fuse with a lower current rating is used, the fuse may open under normal circuit operating conditions. (Any 4 × 1) (4)

3.3
3.3.1 Unacceptable
3.3.2 Unacceptable
3.3.3 Unacceptable
3.3.4 Acceptable
3.3.5 Acceptable
(5 × 1) (5)

3.4
- Block diagrams
- Schematic diagrams
- Wiring diagrams (Any 2 × 1) (2)

[15]

QUESTION 4

4.1

- The completed work is tested or checked against the work schedule
- The worksite is cleaned and made safe
- Tools, equipment and materials are cleaned, checked and returned to storage
- The relevant work permits are signed off and the low-voltage overhead services and associated equipment returned to service
- All documentation is finalised, processed and the appropriate personnel is notified
- All workers are informed that the apparatus will be returned to service
- All earthing gear is removed from the apparatus or circuit
- Lock-out devices are removed according to lock-out procedures
- The appropriate isolators are opened or closed, fuse or neutral links replaced where applicable, and their status verified
- Safety labels, and warning signs are removed, and cubical doors are locked

(Any 4 × 1) (4)

4.2

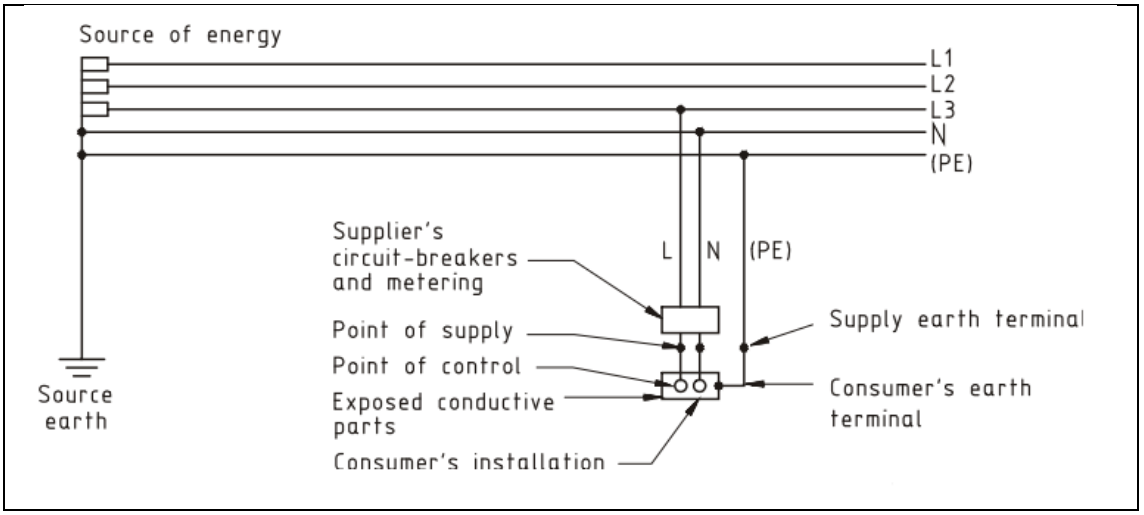

Correct diagram (2 × 1)
Labels (Any 8 × ½) (6)
[10]

QUESTION 5

5.1 The term, illuminance, is used when specifying the amount of light falling onto a surface✓ and is measured in lumens per square metre or lux.✓ (2)

5.2 Argon (1)

5.3
- The arc tube is made of quarts with a tungsten electrode at each end
- The tube contains mercury and argon gas that carry the discharge while the lamp warms up, producing heat to vaporise the mercury
- An auxiliary electrode is placed near one of the two main electrodes and assists in lamp ignition
- This causes the main electrode to heat up and discharge between the two main electrodes starts
- The outer bulb is internally coated with a thin layer of a fluorescent phosphor (5)

5.4
- It initially completes the circuit for preheating the electrodes
- It opens the circuit to provide a voltage kick for ignition (2)

5.5
- Type of material
- Cross-sectional area of the conductor
- Length (3)

5.6
- Ripple relays
- Radio controlled relays (2)

[15]

QUESTION 6

6.1 True
6.2 False
6.3 False
6.4 True
6.5 True
6.6 True
6.7 False
6.8 True
6.9 False
6.10 True

(10 × 1) **[10]**

TOTAL: 100

Copyright reserved