higher education & training

Department:
Higher Education and Training
REPUBLIC OF SOUTH AFRICA

MARKING GUIDELINE

NATIONAL CERTIFICATE (VOCATIONAL)

CONSTRUCTION PLANNING
NQF LEVEL 3

2 December 2024

This marking guideline consists of 6 pages.

Copyright reserved

QUESTION 1: COMMUNICATION IN THE CONSTRUCTION INDUSTRY

1.1
- Using slang
- Small talk
- Using sexist language
- Using racist language
- Vulgarity
- Doublespeak
- Using language that is not understood by everyone
- Speaking in a way that is not understood by the listener (Any 5 × 1) (5)

1.2
- Feedback should be encouraged so that the supervisor can determine if the information✓ which is given out is in consumable amounts✓ and is clearly understood.✓
- Feedback serves as a good way of keeping✓ the communication on track✓ for the construction project.✓
- Recipient can control the pace✓ and sender can make sure the message✓ has been understood correctly.✓ (Any 1 × 3) (3)

1.3
- It ensures that a construction project runs smoothly.
- It ensures that the construction project runs safely.
- It ensures that the construction project runs on budget.
- It ensures that the construction project runs on time.
- Feedback can be given in real time. (Any 2 × 1) (2)

[10]

QUESTION 2: TECHNICAL DRAWINGS

2.1 Freehand drawing.
- Allows for quick idealization✓ and conceptualization of designs. ✓
- It also promotes creativity✓ and artistic expression✓ in the technical drawing process.
- Freehand drawing can help improve hand-eye coordination✓ and spatial awareness skills. ✓

Any (2 × 2) (4)

Copyright reserved

2.2

Marking criteria	Mark allocation					Total achieved
Front view and top view correct			2	1	0	
Radius equal to the true length			2	1	0	
Construction of a development	4	3	2	1	0	
Scale				1	0	
Line work				1	0	
Dimensions				1	0	
Print Title				1	0	
Print Scale				1	0	
				TOTAL:		**13**

(13)

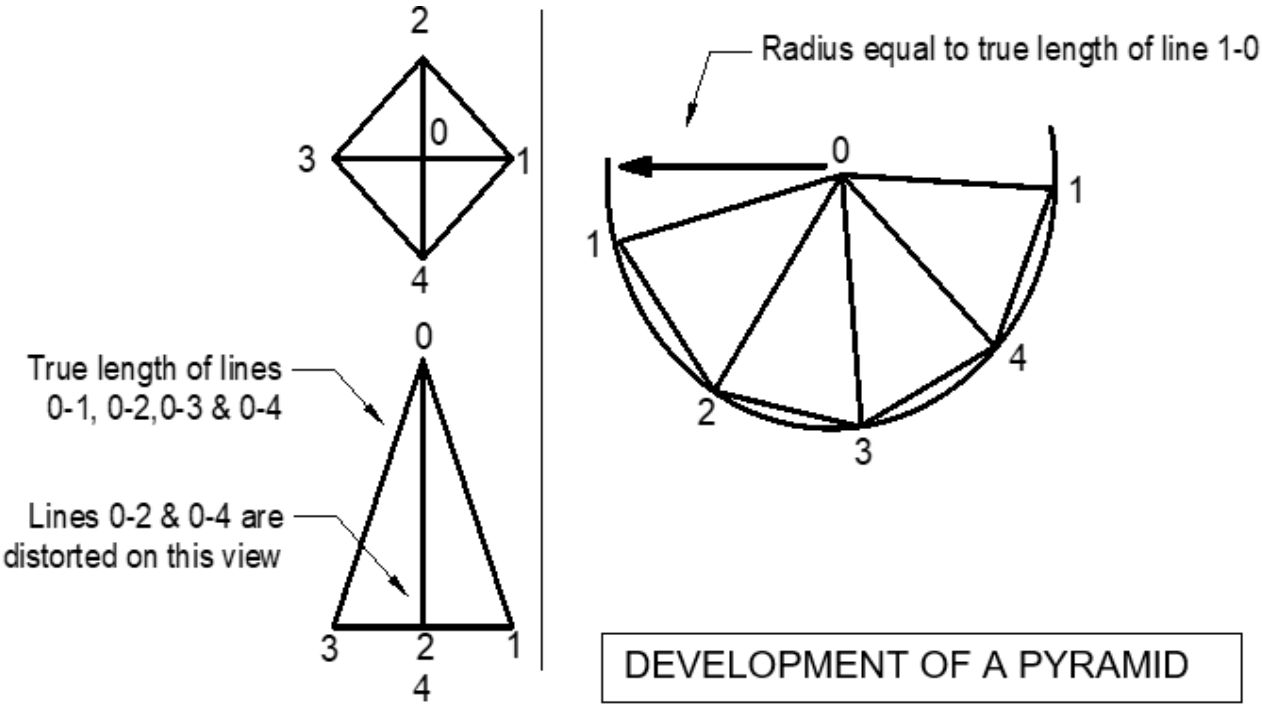

2.3

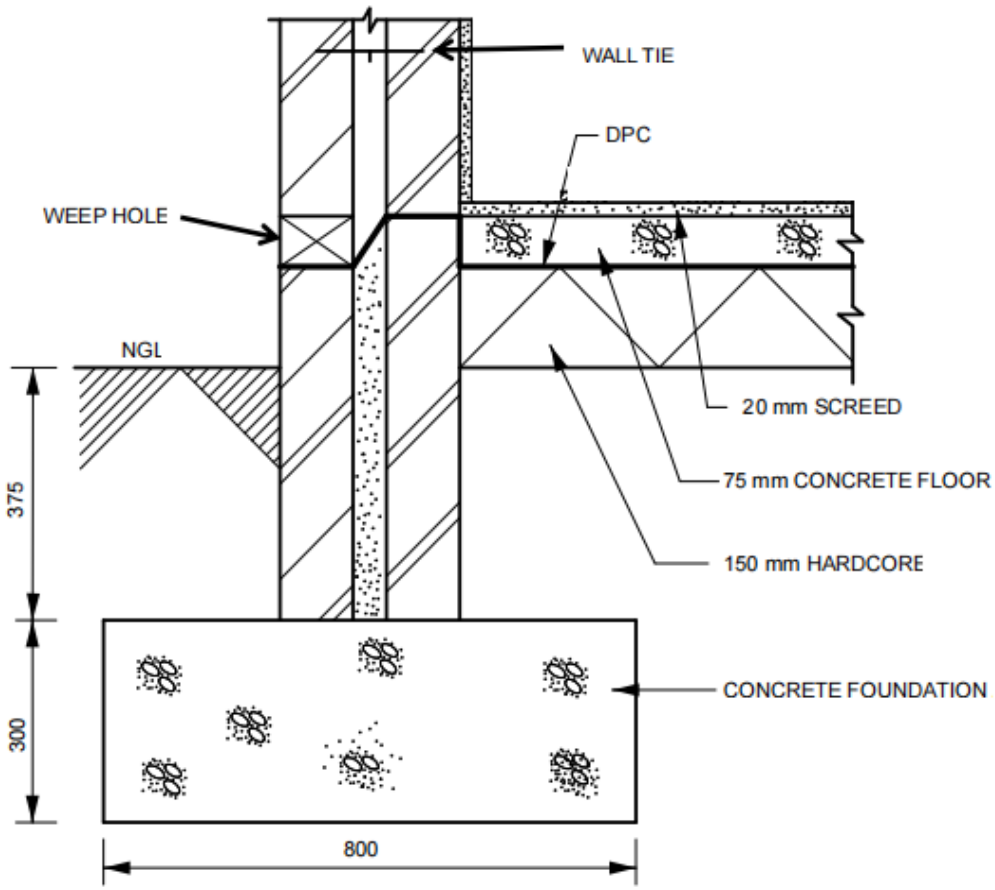

QUESTION 2.3: RUBRIC			
PART OF DRAWING	**MARKING CRITERIA**	**POSSIBLE MARK**	**REMARKS**
Foundation, hard core and concrete floor	Correct position	3	
Screed,	Correct position	1	
Wall, tie wires and plaster	Correct position	3	
DPC, weep hole and ground level	Correct position	3	
Insert any 4 labels (4 x ½)	Correct	2	
Scale	Correct	1	
	TOTAL:	**13**	

(13)
[30]

QUESTION 3: THE SOUTH AFRICAN CONSTRUCTION INDUSTRY

3.1
- He/She is the client's representative on site.
- He/She works under the instruction of the architect.
- He/She makes sure that that the work is done strictly in accordance with the specification.
- He/She must have a wide knowledge of building construction.
- He/She keeps accurate records of the work that is done. (Any 4 × 1) (4)

3.2
- The function of the regulatory body is to establish and strengthen standards✓ and ensure that there is compliance.✓
- Improve labour absorption,✓ labour relations and job stability.✓
- Ensure International✓ competitiveness.✓

(Any 1 × 2) (2)

3.3
- It aims to improve✓ construction industry's production delivery.✓
- It ensures that the industry follows✓ moral procurement practices.✓
- It was established to stimulate sustainable✓ growth in the South African construction industry.✓
- It encourages✓ small business in the construction industry.✓ (4 × 2) (8)

3.4
3.4.1 Inspect
3.4.2 Approved
3.4.3 National Building Regulations
3.4.4 Building
3.4.5 Owner
3.4.6 Documented
3.4.7 Highlight

(7 × 1) (7)

3.5 3.5.1
- It promotes.✓ the use of steel in construction and growing the steel construction industry.✓
- The institute develops.✓ steel technology. ✓
- The institute also strives to provide clients✓with the best service possible.✓
- It aims to encourage qualified, skilled people✓ to enter the industry and to create a culture of innovation. ✓

(Any 3 × 2) (6)

3.5.2 The institute was formed in 1956. (1)

3.6
- A stakeholder refers to any individual or group✓ that has an interest in or is affected by a construction project.✓
- A Stakeholders play a vital role in the planning, execution, and completion of construction projects,✓ as their involvement and collaboration are essential for the success of the project.✓ (Any 1 × 2) (2)

[30]

QUESTION 4: CONSTRUCTION LEGISLATION AND REGULATIONS

4.1 4.1.1 Rational design
4.1.2 Deemed-to-satisfy rules
4.1.3 Agreement certificate
(3 × 2) (6)

4.2
- Must be able to understand✓ and interpret the drawings.✓
- Must be able to understand✓ the different construction methods.✓
- Must be familiar the Home Building Manual✓ and the by-laws of the local authority.✓
- Must be qualified and have experience✓ in the field of home building and construction✓ (Any 2 × 2) (4)

4.3
4.3.1 False✓ (1)
4.3.2 False✓ (1)
4.3.3 True✓ (1)
4.3.4 False✓ (1)
4.3.5 True✓ (1)

4.4
- It was created to provide a standardised system✓ of building control that regulates all buildings.✓
- The Act makes sure that the buildings are safe✓ and healthy to live in.✓
- The Act safeguards the building of structures that are in line with the regulations✓ which leads to the quality of the end product.✓ (3 × 2) (6)

4.5
- The drawings should be followed✓ because it is easier to read and has been approved.✓
- The drawings are also compliant✓ with the national regulations/By-laws.✓
- The drawings are more easily accessible,✓ most accurate and have complete information.✓ (3 × 2) (6)

4.6
- Rules that have been put in place to ensure that buildings are constructed safely and meet certain standards.
- These regulations cover things like the design, construction, and maintenance of buildings to make sure that they are structurally sound, safe for occupants, and energy efficient.
- The purpose of these regulations is to protect the health and safety of people who live and work in buildings.
- They help to prevent accidents, such as collapses or fires, by setting out clear guidelines for how buildings should be built.
- By following these regulations, builders can ensure that their buildings are safe and meet the necessary standards.
- They help to create a more secure environment for everyone who uses the building, whether it's a home, an office, or a public space.
- They are there to make sure that buildings are built to a high standard and are safe for people to use. (Any 1 × 3) (3)

[30]

TOTAL: 100

Copyright reserved