higher education & training

Department:
Higher Education and Training
REPUBLIC OF SOUTH AFRICA

# MARKING GUIDELINE

## NATIONAL CERTIFICATE (VOCATIONAL)

## CONSTRUCTION PLANNING
## NQF LEVEL 3

## 18 February 2025

**This marking guideline consists of 7 pages.**

Copyright reserved

## QUESTION 1: COMMUNICATION IN THE CONSTRUCTION INDUSTRY

1.1 1.1.1 B
1.1.2 A
1.1.3 B
1.1.4 B

(4 × 1) (4)

1.2
- Make eye contact
- Paraphrase or repeat the message
- Ask non-threatening questions
- Practice being mindful
- Be empathetic
- Minimise distraction.
- Prioritise listening over speaking
- Reduce outside noise
- Listen fully before giving advice. (Any 6 × 1) (6)

**[10]**

## QUESTION 2: TECHNICAL DRAWINGS

2.1
- They are orthographic projections of three-dimensional buildings✓ and structures in two dimensions.✓
- It is the view of a building✓ seen from the front, back, left and right.✓
- It is used to represent✓ the external façade of the building.✓
- It is a precise and detailed representation of one vertical plane✓ or face of a building or structure.✓
- It offers a flat,✓ two-dimensional view of a particular side✓
- It captures critical design elements, architectural features, ✓ and the overall aesthetic composition.✓
- It serves as a visual blueprint, presenting a comprehensive✓ and scaled depiction of a building's exterior appearance from a specific vantage point.✓

(Any 3 × 2) (6)

Copyright reserved 

2.2

| Views | Marking criteria | Possible mark | | | Total achieved |
|---|---|---|---|---|---|
| A | Correct position | | 1 | 0 | |
| | Representation of view | 2 | 1 | 0 | |
| B | Correct position | | 1 | 0 | |
| | Representation of view | 2 | 1 | 0 | |
| C | Correct position | | 1 | 0 | |
| | Representation of view | 2 | 1 | 0 | |
| | | | | | |
| | Scale | | 1 | 0 | |
| | Neatness | | 1 | 0 | |
| | Linework | | 1 | 0 | |
| | TOTAL: | | | | 12 |

(12)

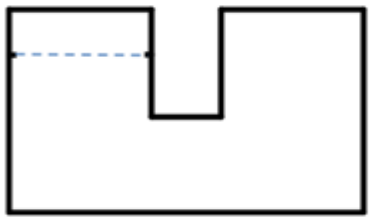

C - Front view

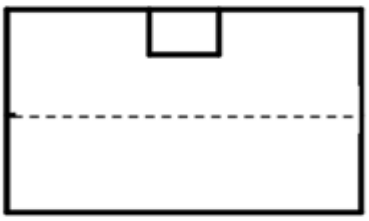

B - Left view

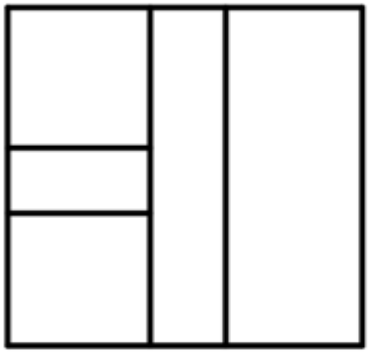

A- Top view

2.3

| Marking criteria | Possible mark | | | | | Total achieved |
|---|---|---|---|---|---|---|
| Door frame and rebate in door frame correct. | 4 | 3 | 2 | 1 | 0 | |
| Universal mortise hinge in door frame correct. | | | 2 | 1 | 0 | |
| Linework | | | | 1 | 0 | |
| Neatness | | | | 1 | 0 | |
| Overall impression | | | 2 | 1 | 0 | |
| Tittle | | | | 1 | 0 | |
| Appropriate size | | | | 1 | 0 | |
| **TOTAL:** | | | | | | 12 |

(12)

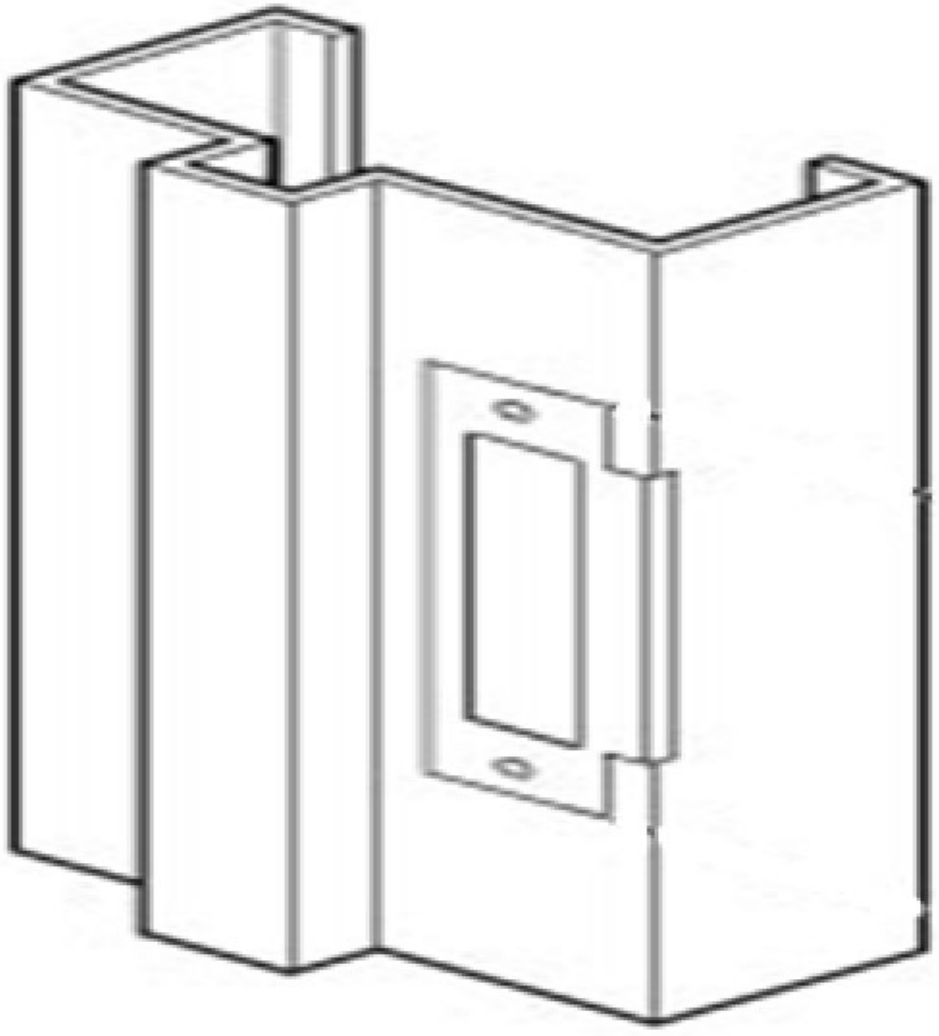

**A WELDED HOLLOW METAL DOOR FRAME**

Copyright reserved 

## QUESTION 3: THE SOUTH AFRICAN CONSTRUCTION INDUSTRY

3.1
- The National Home Builders Registration Council (NHBRC)
- The Cement and Concrete Institute (C&CI)
- South African Institute of Steel Construction (SAISC)
- Concrete Manufacturers Association (CMA)
- Institute of Timber Construction (ITC)
- Institute of Plumbing South Africa (IOPSA)
- Hot Dip Galvanizers Association Southern Africa (HDGASA)
- The Clay Brick Association (CBA) (Any 5 × 1) (5)

3.2 Hot Dip Galvanisers Association of South Africa.
(Give ONE mark for abbreviated answer) (2)

3.3 3.3.1
- The person or company who is contracted✓ to build a structure or do renovation of a building.✓
- They are known as builders✓ of the main construction project.✓
(2 × 2) (4)

3.3.2
- For building the structure.✓✓
- For supplying all the materials, labour, equipment and services✓ necessary for the construction of the project.✓
- Sub-contract part of the construction work to companies✓ that specialise in a specific type of work.✓ (3 × 2) (6)

3.3.3
- Works for the contractor to do a particular job on a project.
- They can complete certain jobs with greater skills.
- They have specialised skills to perform difficult tasks.
- They can perform tasks quickly to the benefit of the project.
(Any 3 × 1) (3)

3.4
- The Engineering Council of South Africa
- The South African Council for Architectural Professionals
- The South African Council for Quantity Surveying Professionals
- The Master Builders Association
- The South African Federation of Civil Engineering Contractors (5 × 2)
(Give ONE mark for abbreviated answers) (10)

**[30]**

## QUESTION 4: CONSTRUCTION LEGISLATION AND REGULATIONS

4.1
- They were being drawn up by the local authorities✓✓
- They were to a certain degree authoritarian in nature.✓✓
- They work well only to a certain extent✓ because they prescribe in detail what the designer must do to obtain approval to build.✓
- They were restrictive;✓ as a result they became a hindrance to ground-breaking building design and different methods of construction.✓
(Any 3 × 2) (6)

4.2 4.2.1
- Engineering Profession of South Africa Act, 1990 (Act No. 114 of 1990)
- Section 11 of the National Scientific, Professions Act, 1993 (Act No. 106 of 1993)
- Housing consumers Protection Measures Act 95 of 1998

(Any 1 × 2) (2)

4.2.2
- A competent person should have the necessary knowledge and skill.
- Have experience related to the task at hand.
- Have the necessary qualifications and training.
- Familiar with the Home Building Manual and all bylaws

(Any 3 × 1) (3)

4.3
- Deem to satisfy rule✓ indicate that if certain conditions are met or criteria are satisfied, then something is automatically considered to be acceptable or compliant. ✓
- Rational design ✓is a process where something is created or planned in a logical and thoughtful way. It involves using reason and careful thinking to come up with a solution or design.✓
- An agreement certificate✓ is a document that confirms that two or more parties have agreed on something. It serves as proof that all parties involved have agreed to certain terms or conditions. ✓

(3 × 2) (6)

4.4
- Registration: The contractor must be registered with the relevant government agencies or authorities✓ to be eligible to tender for public sector projects. ✓
- Compliance: The contractor must comply with all legal and regulatory requirements, ✓ such as having the necessary licenses, insurance, and certifications. ✓
- Experience: The contractor should have relevant experience in similar projects✓ to demonstrate their capability to successfully complete the work. ✓
- Financial stability: The contractor must have a stable financial position✓ to ensure they can complete the project without any financial issues. ✓
- Quality standards: The contractor may need to meet specific quality standards or certifications✓ to ensure the work meets the required standards. ✓

(Any 2 × 2) (4)

4.5
4.5.1 C
4.5.2 D
4.5.3 A
4.5.4 B
4.5.5 E

(5 × 1) (5)

Copyright reserved 

4.6
- Name of registered owner.
- Name of person appointed.
- Address of the property.
- Description of work to be undertaken.
- Date of appointment.

(Any 4 × 1) (4)
**[30]**

**TOTAL: 100**

Copyright reserved