higher education & training

Department:
Higher Education and Training
REPUBLIC OF SOUTH AFRICA

MARKING GUIDELINE

NATIONAL CERTIFICATE (VOCATIONAL)

CONCRETE STRUCTURES
NQF LEVEL 3

21 November 2024

This marking guideline consists of 6 pages.

Copyright reserved

QUESTION 1

1.1 1.1.1 Steel corrosion (rust) expanding inside concrete leads to cracks in concrete. (2)

1.1.2 Concrete is confined and restrained from moving by loads and temperature changes that cause concrete to crack. (2)

1.1.3 Soil settling around foundations can cause concrete to crack. (1)

1.1.4 The temperature of freshly placed concrete will rise because of a chemical reaction. If concrete cools down or settles too quickly, hairline cracks can appear. (2)

1.2

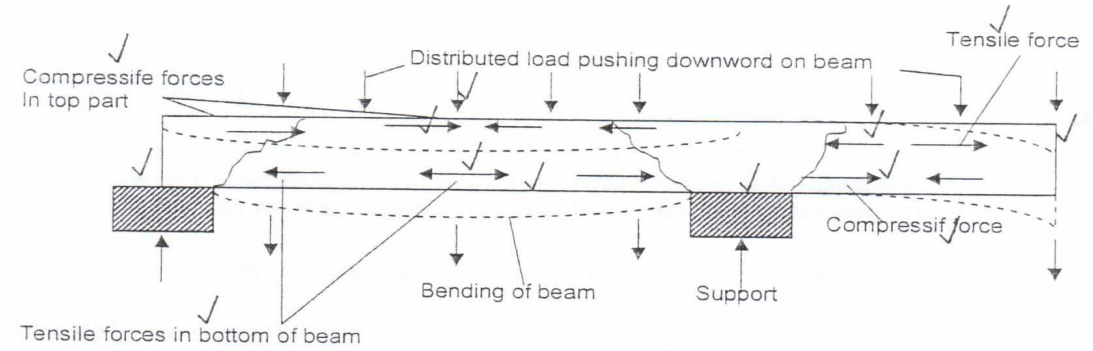

Mark alocation:
Supprted beam – 1
Canterleaver – 1
Forces – 5
Supports – 2
Label – 1 (Any correct label)

(10)

1.3

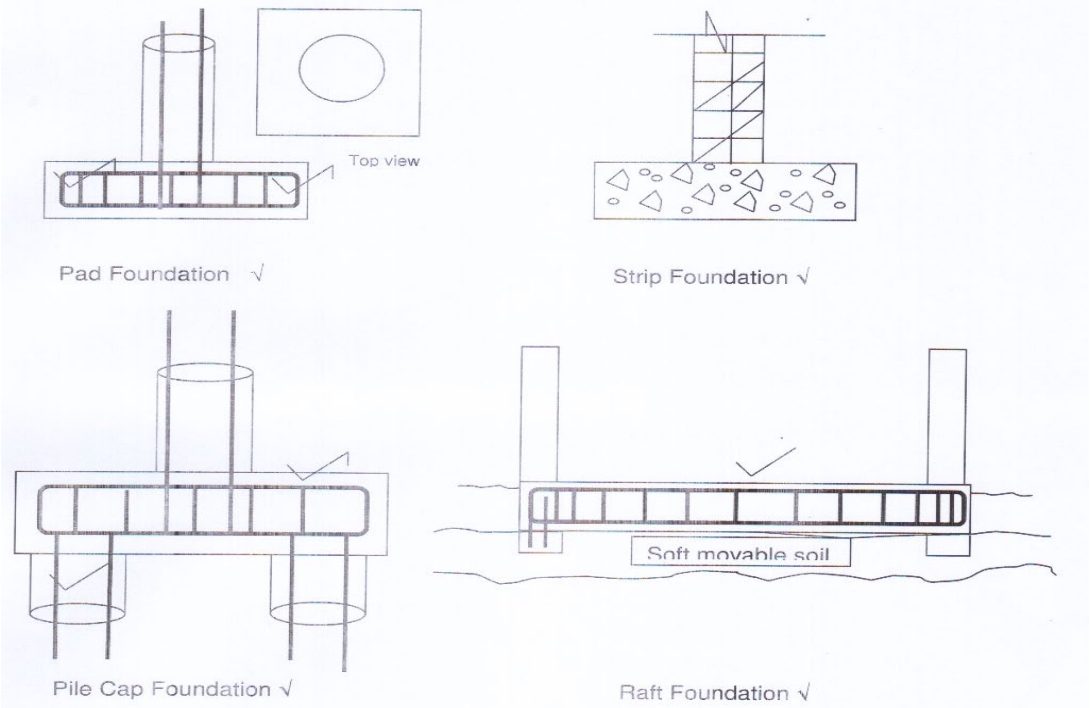

(4 × 2) (8)

[25]

QUESTION 2

2.1 2.1.1 Two diametrically opposite longitudinal ribs with herringbone pattern with deformations on either side of the ribs.✓✓

2.1.2 Two diametrically opposite longitudinal ribs in a spiral form, with inclined deformations in the same direction on either side of the ribs.✓✓

2.1.3 Two diametrically opposite longitudinal ribs with inclined deformation in the same direction on either side of the ribs.✓✓

(3 × 2) (6)

2.2

Advantages	Disadvantages
• To fix steel mesh is much faster than to rebar.✓ • Labour costs are lower and you can place concrete • into the formwork earlier.✓ • There is less bending and sorting of bars.✓	• Depending on the size of the panel welded mesh, you may need special lifting equipment to lift and move sheets and reinforcement cages.✓ • Steel mesh is expensive. • Because it is difficult to change the amount of steel to suit the loading in the structure, reinforcing may not be economical.✓ • Since the size of the mesh panel often differs from the size you need, cutting the panels to size results in a great deal of wastage.✓

(6)

2.3 2.3.1 Drawing: metal is pulled through a small hole in a die, which is a specification tool used in manufacturing industries to cut, shape and form a wide variety of products and components.✓✓

2.3.2 Deep drawing: a punch forces a metal sheet into a die.✓✓

2.3.3 Cold rolling: A metal strip is passed between two rolls that have a narrow gap between them.✓✓

2.3.4 Pressing: A metal sheet is pressed onto a shaped die or mould to form a complex shape such as a car body panel.✓✓

2.3.5 Cold working: the shape and size of a metal is changed at room temperature.✓✓

(5 × 2) (10)

Copyright reserved

2.4 8 mm
10 mm
12 mm
16 mm
20 mm
25 mm
32 mm (Any 3 × 1) (3)
[25]

QUESTION 3

3.1

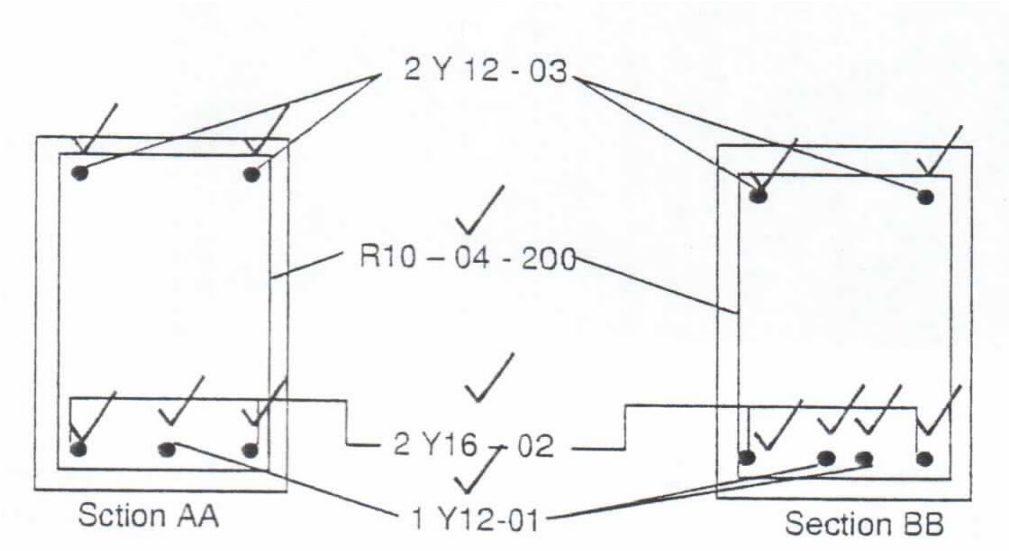

(14)

3.2 Answer on answer sheet (ADDENDUM B)

A	B	C	D	E	F	G	H			
Member							Bending dimensions			
✓	Bars per member	Total bars	Type/ diameter	Bar mark	Shape code	Total length	A	B	C	D
	✓	✓	✓	✓		✓				
2	18	36	R8	02	42	670	150	300	100	120

FIGURE 2 (6)

3.3 Shape 42

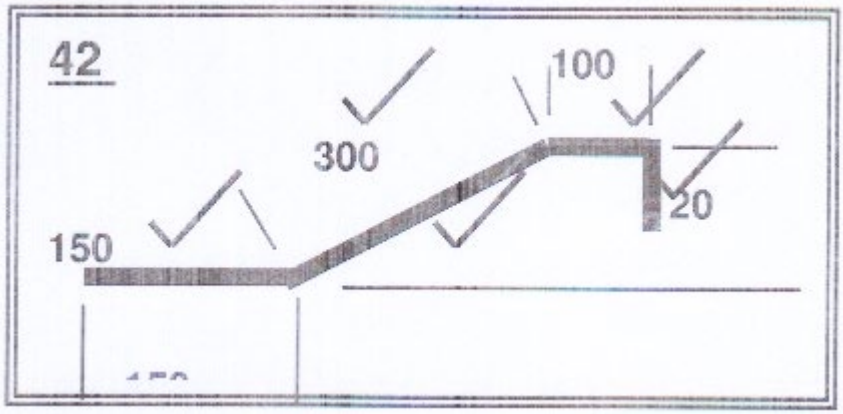

(FOUR marks for correctness and ONE mark for ***Measurement***) (5)
[25]

QUESTION 4

4.1 4.1.1 Crown.
4.1.2 Hairpin.
4.1.3 Ring hairpin.
4.1.4 Splice.
4.1.5 Ring slash.
4.1.6 Ring slash

(6 × 1) (6)

4.2
- A hydraulically operation steel bending machine.
- A hand operation bending machine.
- A combination cutting/bending machine. (Any 2 × 1) (2)

4.3

TYPE OF DOCUMENT	WHAT ITS PURPOSE IS	WHO USES IT	THE INFORMATION IT GIVES
Cutting and bending sheet	To tell the steel cutter and steel bender how the steel for a particular job must be cut and bent (2)	Yard foreman, steel cutter, steel bender people who load the bent steel onto the delivery trucks, driver of the delivery truck. (1)	Order and job number, diameter, length. Shapes and quality of steel, for whom and what the steel is for. (1)
Bar label	To label bars of steel. Each label gives specific information about a bar of steel. (1)	Steel cutter and steel bender, people who load the bent steel onto the truck; people using the steel on site. (1)	Cutting and bending number, customer details, drawing reference, bar mark, details, shape information, including diameters, code, lengths. (1)
Delivery note	To give information about the steel that will be delivered to a customer/site. (1)	Driver who delivers the steel**;** person who receives the steel delivery. (1)	Total mass of the types of steel delivered; shape codes of the different steel bars; customer's name; delivery address; order number; date of delivery. (1)

(10)

4.4
a Receiving.
b Cutting.
c Bending.
d Administration.
e Dispatch.

(5 × 1) (5)

4.5
- Lap: pieces of rebar overlap to create a continuous line of bars.
- Splice: method of joining two members end to end. (2)

[25]

TOTAL: 100

Copyright reserved