higher education & training

Department:
Higher Education and Training
REPUBLIC OF SOUTH AFRICA

MARKING GUIDELINE

NATIONAL CERTIFICATE (VOCATIONAL)

CIVIL AND STRUCTURAL STEEL WORK DETAILING
NQF LEVEL 3
(Second paper)

13 November 2024

This marking guideline consists of 6 pages.

Copyright reserved

This marking guide serves as a guideline, it is not absolute. Alternative correct answers must be considered.

QUESTION 1 REINFORCED CONCRETE DETAILING AND SPECIFICATIONS

1.1

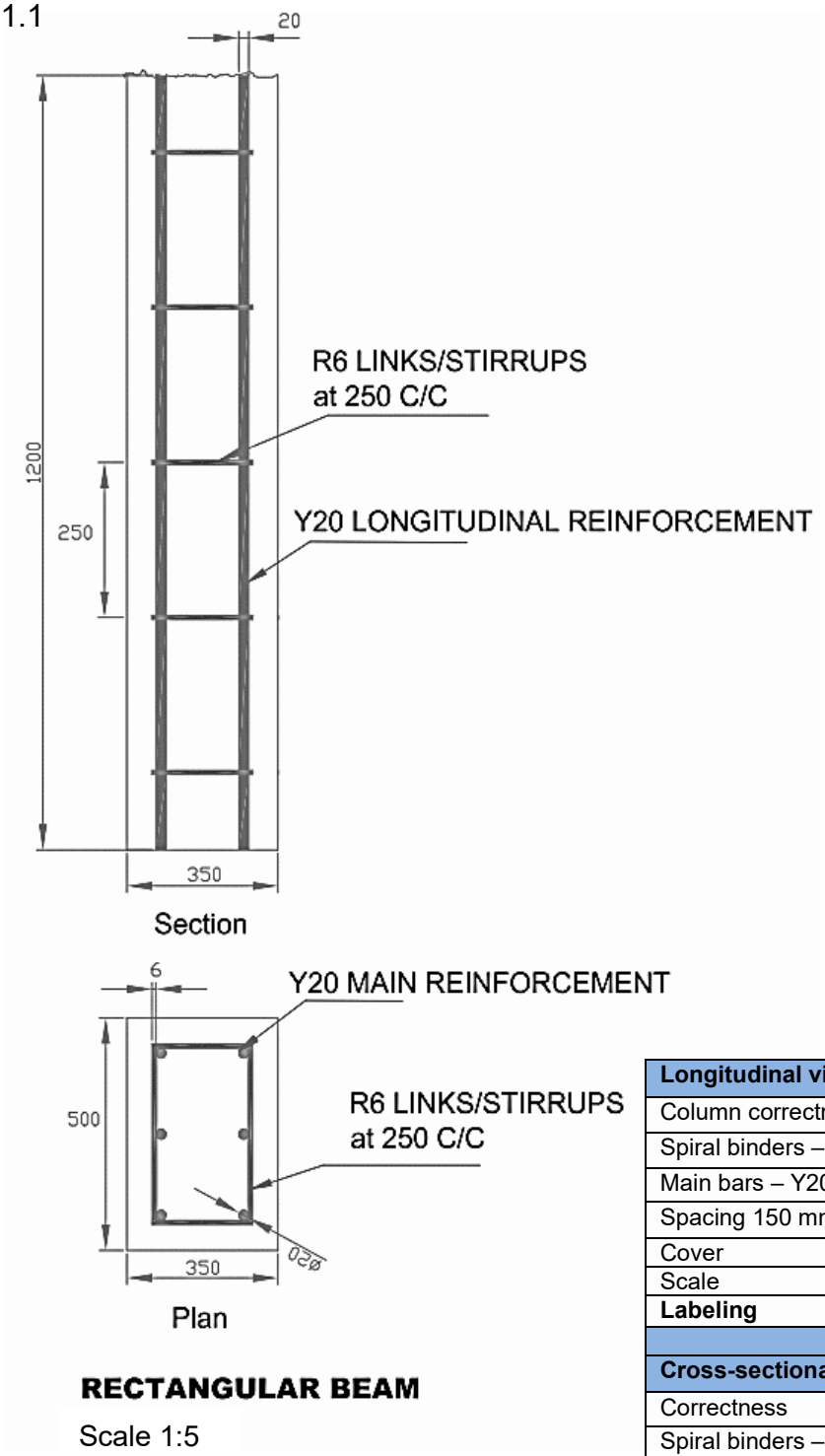

Longitudinal view		
Column correctness	2	
Spiral binders – R6	2	
Main bars – Y20	2	
Spacing 150 mm	1	
Cover	1	
Scale	1	
Labeling	1	Any 2 correct
	(10)	
Cross-sectional view		
Correctness	3	
Spiral binders – R6	2	
Main bars – Y20	2	
Spiral binders – R6	1	
Cover	**1**	
Labeling	**1**	Any 2 correct
	(10)	

(20)

1.2

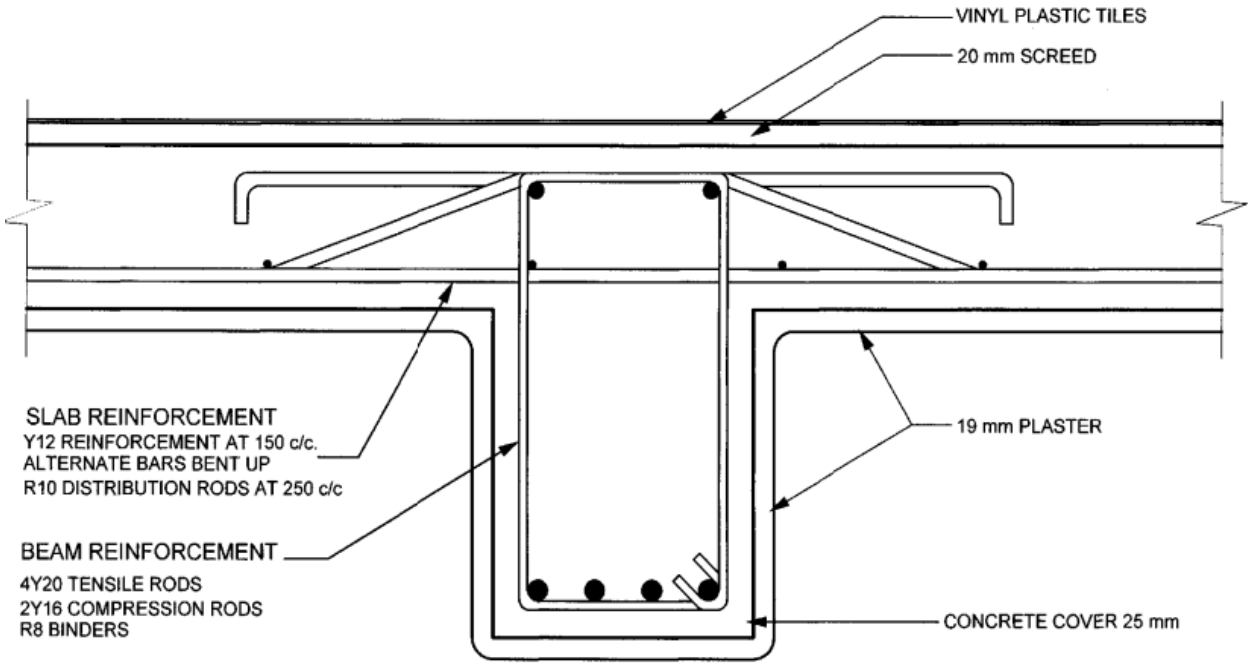

VERTICAL SECTION THROUGHT A T-BEAM
SCALE 1:5

Cross-sectional view		
Overall layout and presentation	3	
Drawn to correct scale	1	
T-Beam dimensions correct	1	
Slab dimensions correct	1	
T-beam plaster	1	
Screed and floor cover to slab	1	
Beam reinforcement	1	Any 2 correct
Beam main steel	1	
Slab bent up bars	1	
Concrete cover	1	
Labels	2	
Title and scale	1	
	(15)	

(15)
[35]

QUESTION 2: STRUCTURAL STEELWORK DETAILING AND SPECIFICATIONS

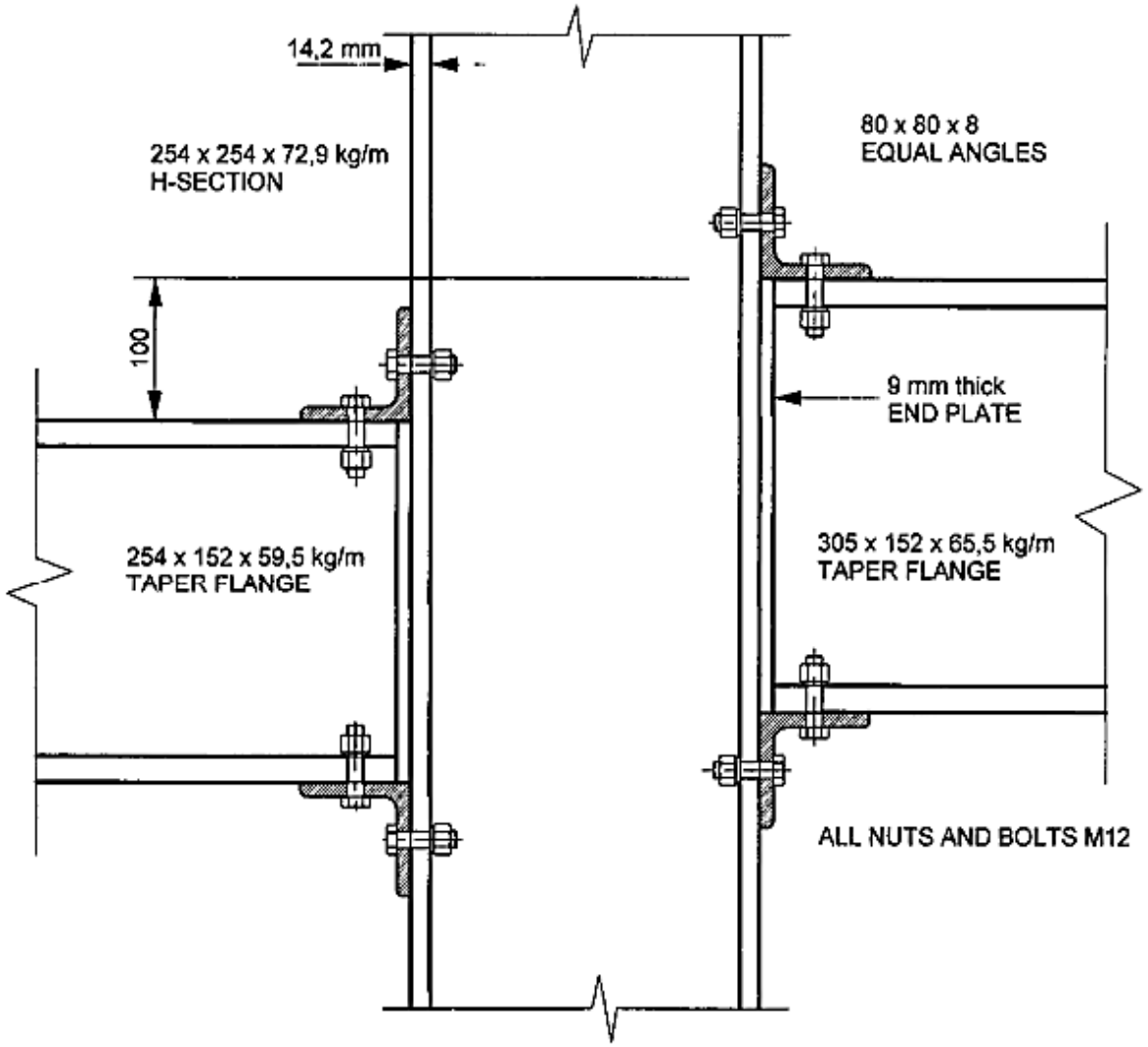

Cross-sectional view		
Correct interpretation	2	
Scale correct	1	
Off-set distance correct	1	
Column drawn correctly	2	
Right hand beam and end plate	2	
Left hand beam and end plate	2	
Four angles	4	
All bolts correct	4	
Dimension	2	
Labels	2	
	(20)	

[20]

QUESTION 3: STRUCTURAL STEELWORK DETAILINGS

3.1 Detail A

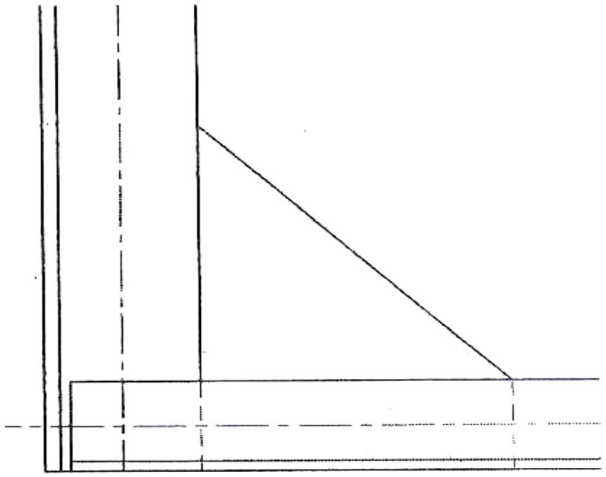

MARK ALLOCATION	
Correct scale	1
Bottom chord detail is correct	2
Gusset plate	1
Line work	1
Rolled steel detail is shown	1
	6

3.2 Detail B

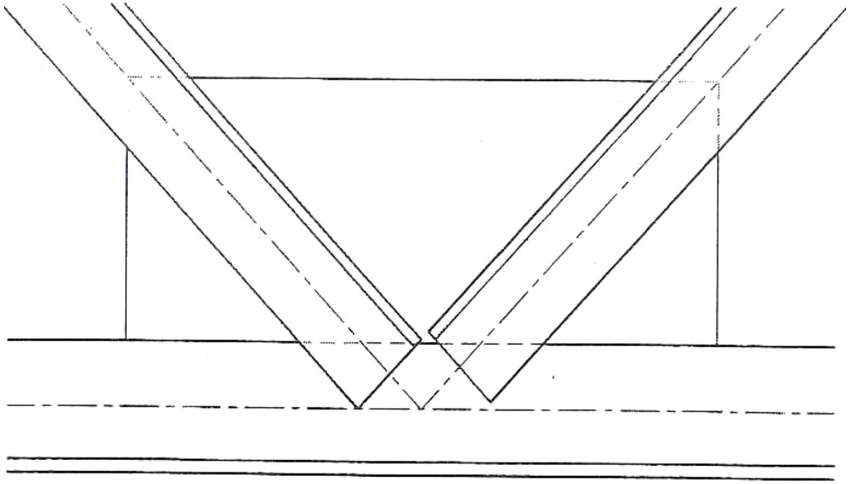

MARK ALLOCATION	
Correct scale	1
Bottom chord detail correct	2
Gusset plate	2
Line work	1
Rolled steel detail shown	1
	7

Copyright reserved

3.3 Detail C

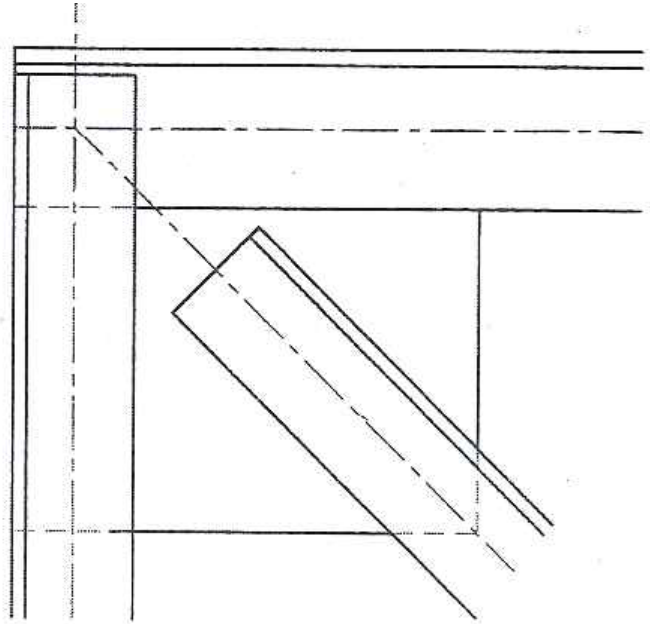

MARK ALLOCATION	
Correct scale	1
Top chord detail correct	2
Gusset plate	2
Line work	1
Rolled steel detail shown	1
	7

[20]

TOTAL: 75

Copyright reserved