higher education & training

Department:
Higher Education and Training
REPUBLIC OF SOUTH AFRICA

MARKING GUIDELINE

NATIONAL CERTIFICATE (VOCATIONAL)

CIVIL AND STRUCTURAL STEEL WORK DETAILING
NQF LEVEL 4
(Second paper)

13 November 2024

This marking guideline consists of 4 pages.

Copyright reserved

QUESTION 1

MARK ALLOCATION	
DIMENSIONS	4
CORRECTNESS	12
SCALE	2
LABELLING	6
ACCURACY	2
LINE THICKNESS	2
NEATNESS	2
TOTAL	**30**

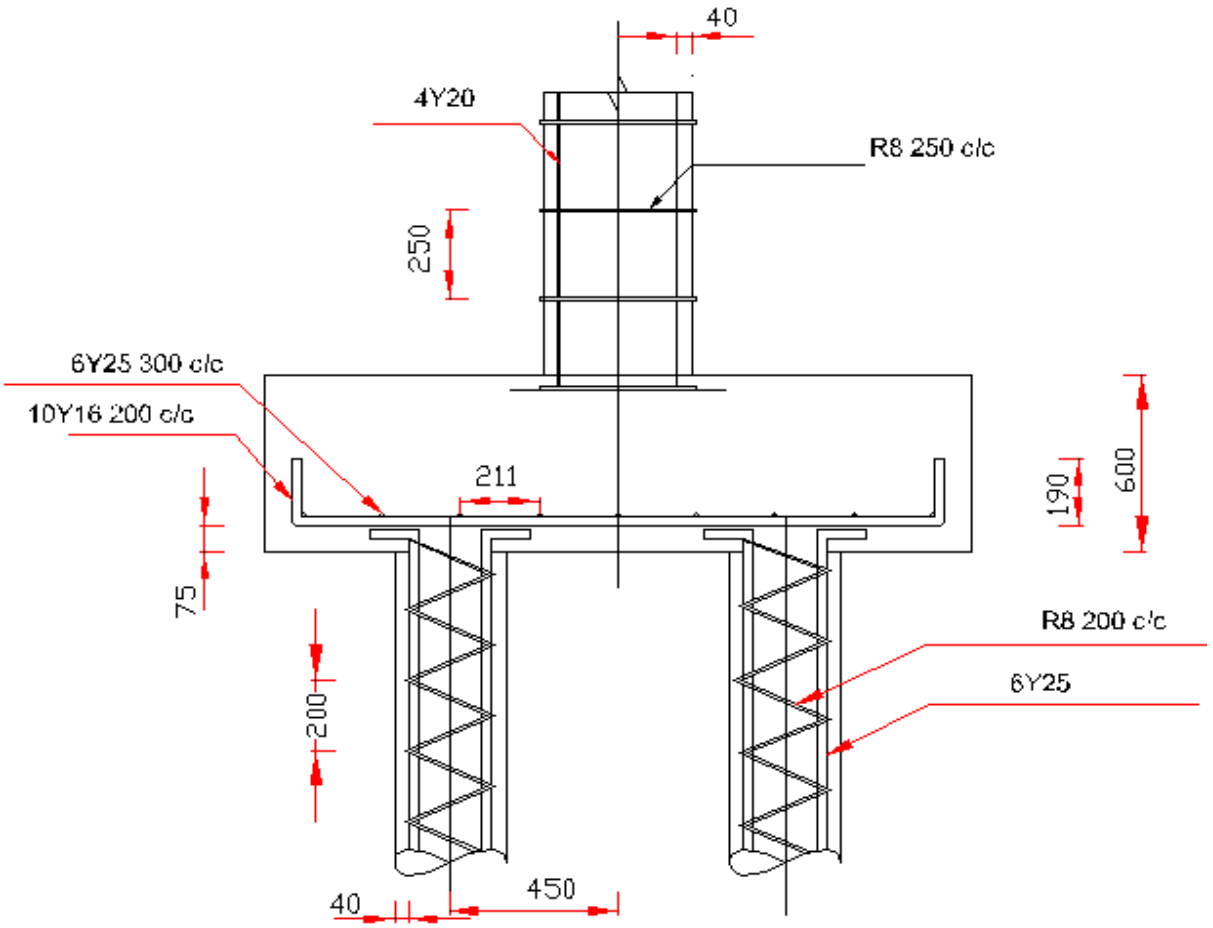

PILE CAP FOUNDATION

SCALE: 1:10

[30]

Copyright reserved

QUESTION 2: RECTANGULAR GRID

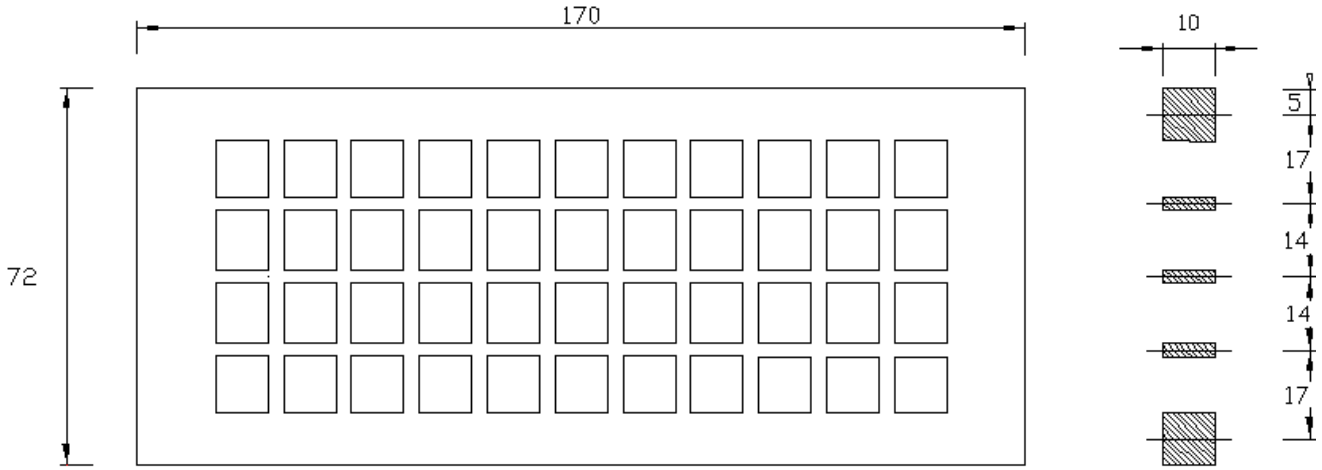

Rectangular Grid
Scale 1:1

MARK ALLOCATION	
DIMENSIONS (½ each)	4
CORRECTNESS	6
SCALE	2
ACCURACY	2
LINE THICKNESS	4
NEATNESS	2
TOTAL	**20**

[20]

QUESTION 3: TRUSSES

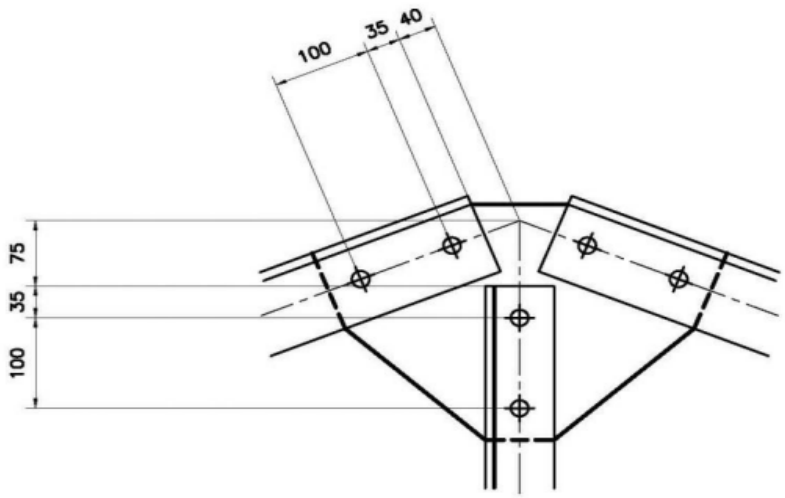

DETAIL A
SCALE 1:5

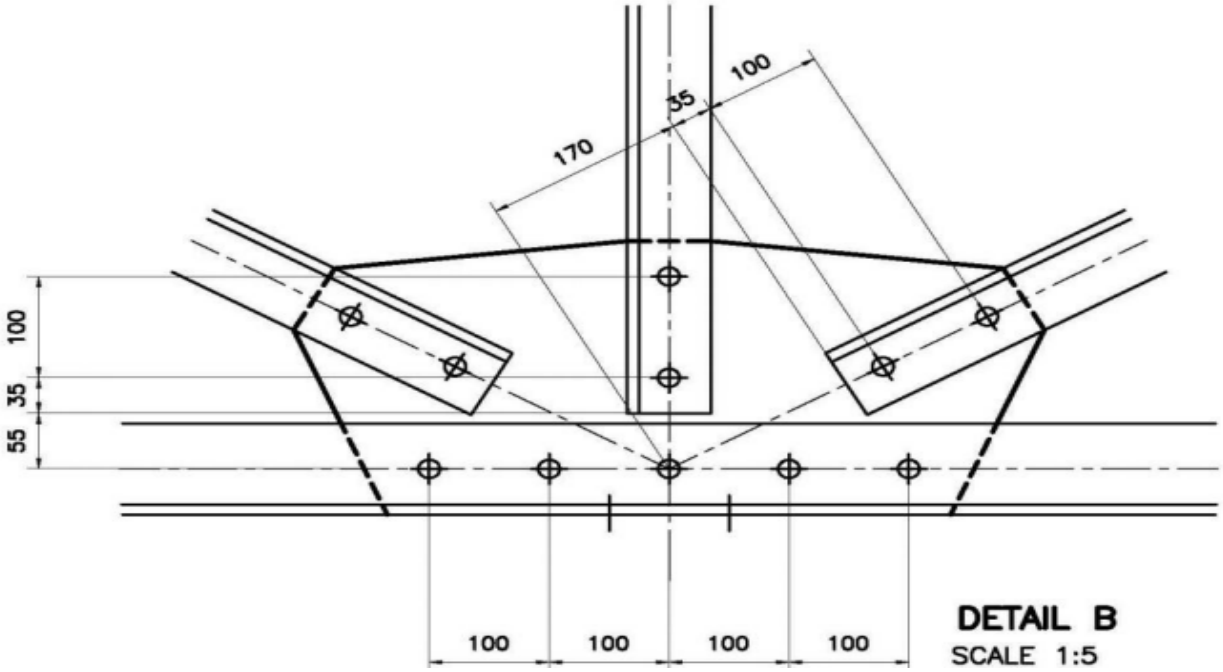

DETAIL B
SCALE 1:5

MARK ALLOCATION: A	
DIMENSIONS	2
CORRECTNESS	4
SCALE	2
ACCURACY	2
LINE THICKNESS	1
NEATNESS	1
DETAIL A	**12**

MARK ALLOCATION: B	
DIMENSIONS	2
CORRECTNESS	6
SCALE	2
ACCURACY	1
LINE THICKNESS	1
NEATNESS	1
DETAIL B	**13**

[25]

TOTAL: 75

Copyright reserved