higher education & training

Department:
Higher Education and Training
REPUBLIC OF SOUTH AFRICA

MARKING GUIDELINE

NATIONAL CERTIFICATE (VOCATIONAL)

STORED PROGRAMME SYSTEMS
NQF LEVEL 4

12 November 2024

This marking guideline consists of 6 pages.

Copyright reserved

QUESTION 1

1.1 In synchronous transmission the clocking is derived from the data✓ which are absent in asynchronous transmission.✓ (Use discretion when marking) (2)

1.2
- Emails
- Company newsletter
- Forum comments
- Instant messengers
- Project management tools (such as Asana, Trello, Wrike)
- Company portals or intranet
- Slack (MS Teams)

(Any ONE relevant answer) (1)

1.3 Optical fibre (Fibre optic cables).✓ (1)

1.4
- Amplitude modulation✓
- Frequency modulation✓
- Phase-shift modulation✓

(3)

1.5 The transducer forms the heart of a sensor system in that it has the ability to convert the physical quantity being measured into an electrical signal.✓✓ (Use discretion when marking) (2)

1.6

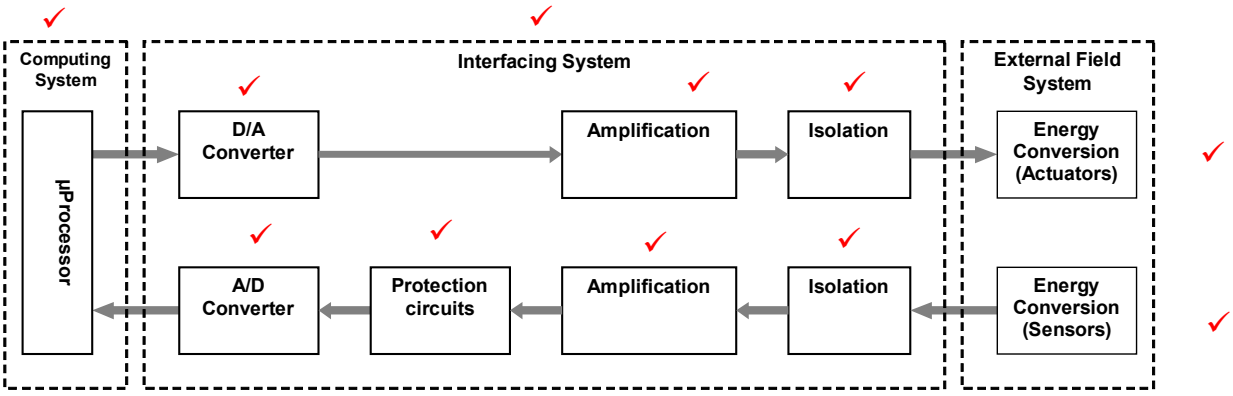

Interfacing signal flow block diagram
(Use discretion when marking) (11 × 1) (11)
[20]

QUESTION 2

2.1 2.1.1 Distribution process – feeds materials into the production system.✓✓ (Use discretion when marking)

2.1.2 Material handling – refers to the transfer of materials or work pieces between process points such a conveyor or a pick-n-place device.✓✓ (Use discretion when marking)

2.1.3 Palletising process – is the process in which a robot or pick-n-place device packs items in a bonded format.✓✓
(Use discretion when marking)

2.1.4 Testing process – tests the status of the material by means of sensors.✓✓ (Use discretion when marking)

2.1.5 Buffering – is used for reducing dead time (bottlenecks), where work pieces are fed into a waiting area that enables a pick-n-place device or robot to retrieve them when required.✓✓
(Use discretion when marking)(5 × 2) (10)

2.2 Industrial Ethernet is better suited to handling factory noise,✓ factory process needs,✓ and harsher environments,✓ and is even able to respond better to data collisions at the plant floor.✓ (4 × 1) (4)

2.3 **INDUSTRIAL ETHERNET**

	INVENTORY LIST	**YES**	**NO**
1.	Delivery information concerning products used (cables, junction boxes, etc.) and their data sheets✓		
2.	Technical information (connection diagrams, assembly tips, etc.)✓		
3.	Measurement protocols for all installed lines.✓		
4.	Layout diagrams with connection points and distributor locations.✓		
5.	Details about equipotential bonding methods.✓		

(Source: *www.weidmueller.com)*
(1 mark for table✓)
(Use discretion when marking) (6)
[20]

QUESTION 3

3.1
- Lockout
- Emergency stops
- Accidental powering of outputs
- Orderly equipment shutdown
- Grounding
- Controlled power distribution
- Unauthorised access
- Finger-safe connections and dead fonts
- Closed-loop control (Any 3 × 1) (3)

3.2

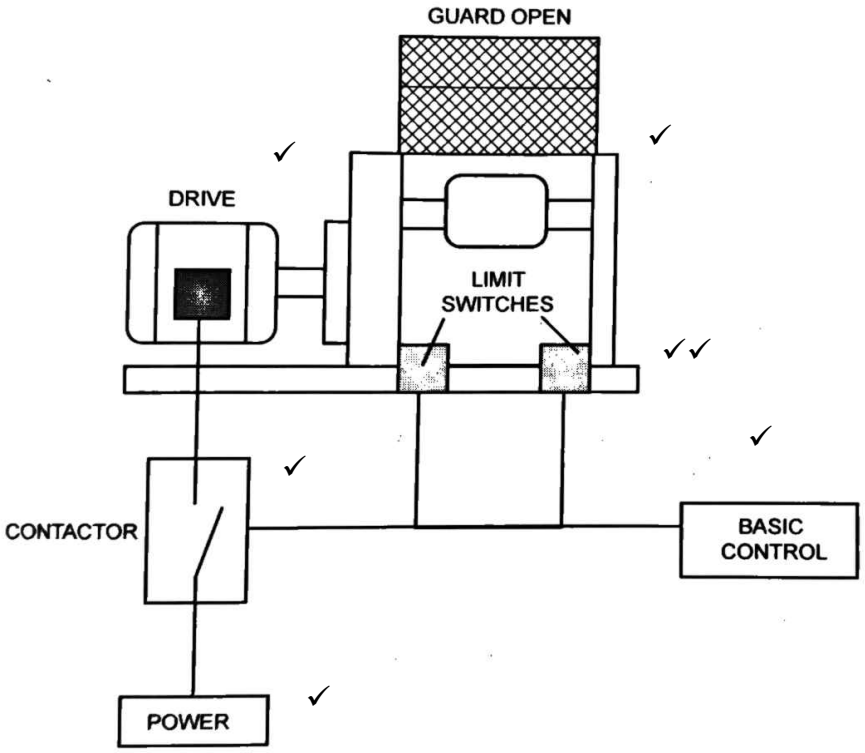

(Use discretion when marking) (7 × 1) (7)

3.3 Dead fronts should be used on control system enclosures where the operator needs to make adjustments to devices,✓ such as selector switches, thumbwheels and potentiometers,✓ and the controls need to be inside the enclosure✓ to protect them from outside weather conditions. ✓
(Use discretion when marking)(4 × 1) (4)

3.4
- Input devices such as sensors and switches to gather information.✓✓
- A safety logic controller that makes logical decisions from the information gathered.✓✓
- Output devices such as actuators that react to the logical decisions made.✓✓ (3 × 2) (6)

[20]

QUESTION 4

4.1
- Dimensions✓
- Torque✓
- Speed✓
- Current consumption✓
- Output✓ (5)

4.2
- Structure: defined by parts and their composition.✓✓
- Behaviour: involving inputs, processing and outputs of material, energy or information.✓✓
- Interconnectivity: functional and structural relationships between parts.✓✓

(3 × 2) (6)

4.3 Timing diagram – a diagram defining the behaviour of functional interactions within a time scale.✓ (1)

4.4

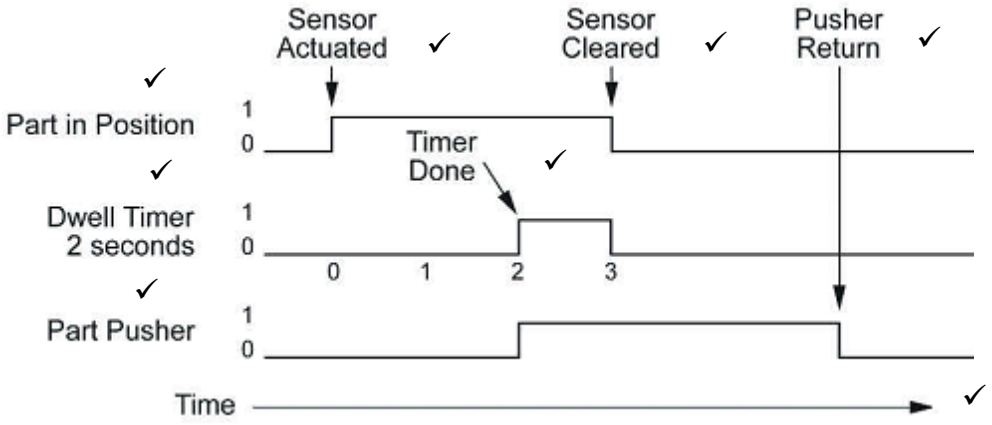

(Use discretion when marking) (8 × 1) (8)

[20]

QUESTION 5

5.1 5.1.1 Visual inspection – verify that the machine meets internal and external electrical and worker safety codes (e.g. OSHA). Determine whether all components are present.✓✓

5.1.2 Mechanical installation – physically locate the machine, then connect it to adjacent machines and other required services.✓✓

5.1.2 Electrical installation – connect grounds and power, conduct high potential and ground fault tests, and verify sensor inputs to the PLC.✓✓

(Use discretion when marking) (3 × 2) (6)

5.2 **WIRING GUIDELINES**

	CHECK LIST	YES	NO
1.	The capacity of each terminal connection does not exceed 1,5 mm^2 or 1 mm^2 wires.✓		
2.	Continuous length of wire is always used. Do not splice wires to attain the required length.✓		
3.	Shortest possible wire length is used.✓		
4.	Wire trays are used for routing where possible.✓		
5.	Running control wires near high-energy wiring is avoided.✓		
6.	Running input wiring close to output wiring is avoided where possible.✓		
7.	Minimise voltage drops when wires run a long distant, consider using multiple wires for the return line.✓		
8.	Running DC wiring in close proximity to AC wiring is avoided.✓		
9.	Creating sharp bends in the wires is avoided.✓		
10.	A power-line filter to reduce power surges and EMI/RFI noise is installed.✓		

(Discretion to be used when marking) (10)

5.3
- Failure rate
- Lifetime distribution
- Failure probability
- Survival probability
- Failure probability density

(Any 4 × 1) (4)
[20]

TOTAL: 100

Copyright reserved