higher education & training

Department:
Higher Education and Training
REPUBLIC OF SOUTH AFRICA

MARKING GUIDELINE

NATIONAL CERTIFICATE (VOCATIONAL)

ROBOTICS FUNDAMENTALS

(Second paper)

NQF LEVEL 2

3 December 2024

This marking guideline consists of 6 pages.

Copyright reserved

QUESTION 1

1.1

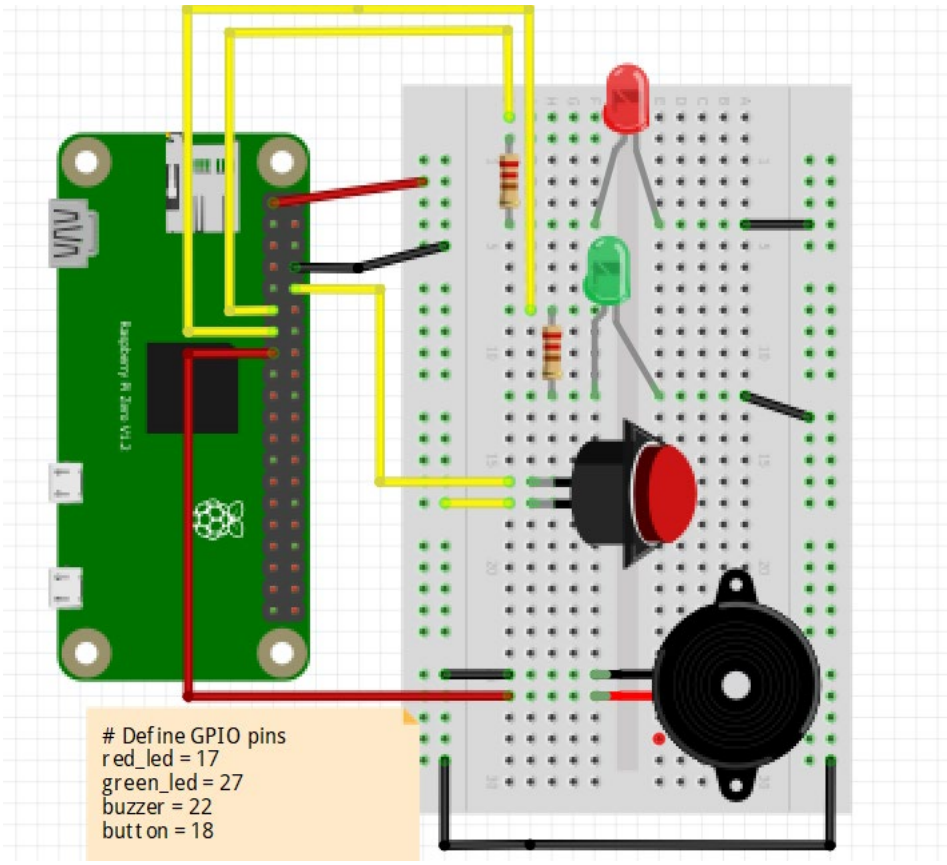

LEDs and resistors are correctly connected.	(2)
Proper use of resistors for current limiting.	(2)
Design of the entire circuit is correct.	(5)
Current limiting resistors connected to anode (+positive) leg of led.	(2)
No crossing wires.	(1)

1.2

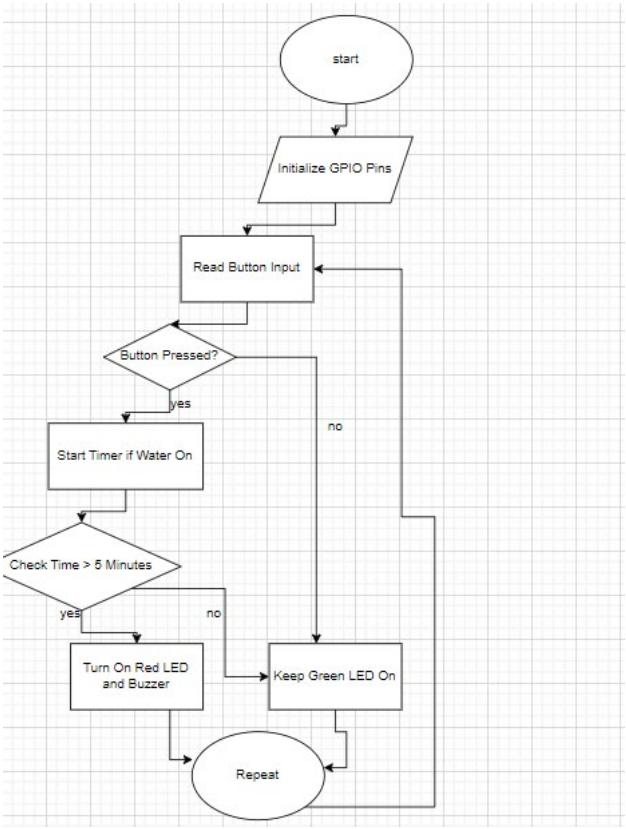

(11)

1.3 Breadboard circuit and flowchart SAVED and PRINTED. (2)
[25]

QUESTION 2

```
import RPi.GPIO as GPIO
import time

# Set the GPIO mode to BCM (Broadcom SOC channel numbering)
GPIO.setmode(GPIO.BCM)

# Define the GPIO pin where the LED is connected
led_pin = 17

# Set up the LED pin as an output
GPIO.setup(led_pin, GPIO.OUT)
```

```
try:
    while True:
        # Turn the LED on
        GPIO.output(led_pin, GPIO.HIGH)  # GPIO.HIGH means on
        print("LED ON")
        time.sleep(1)  # Keep the LED on for 1 second

        # Turn the LED off
        GPIO.output(led_pin, GPIO.LOW)   # GPIO.LOW means off
        print("LED OFF")
        time.sleep(1)  # Keep the LED off for 1 second

except KeyboardInterrupt:
    # Clean up GPIO settings on exit
    GPIO.cleanup()
    print("Program stopped and GPIO cleaned up.")
```

2.1 File created. (3)

2.2 Programme recreated. (10)

2.3 Any 10 comments. (10)

2.4 Code SAVED and PRINTED from the IDE. (2)
[25]

QUESTION 3

3.1

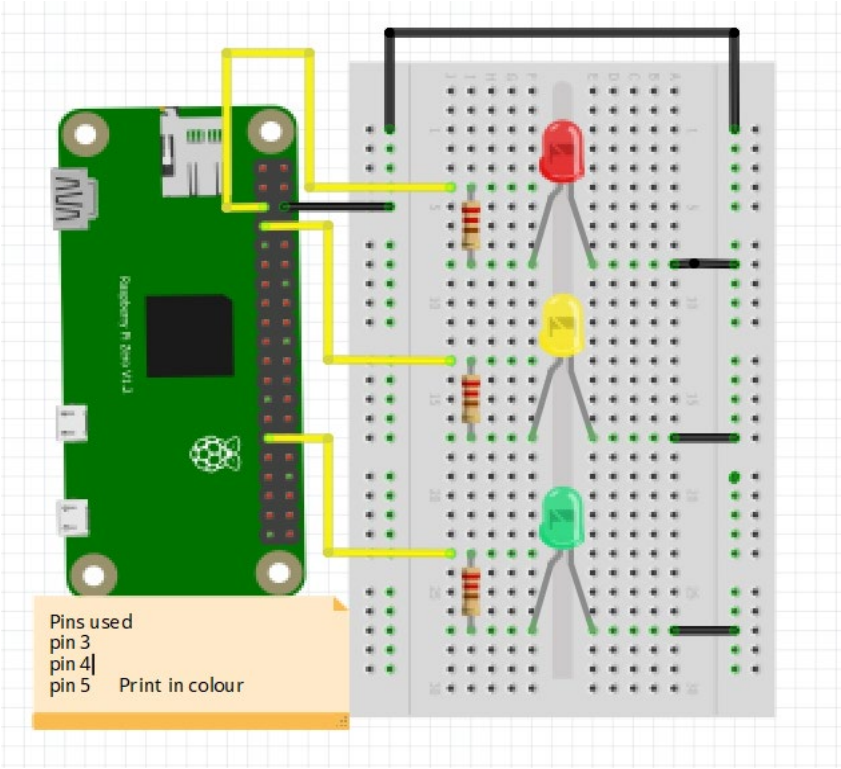

LEDs and resistors are correctly connected.	(2)
Proper use of resistors for current limiting.	(2)
Design of the entire circuit is correct.	(6)
Current limiting resistors connected to anode (+positive) leg of led.	(2)
No crossing wires.	(2)

3.2

```
import RPi.GPIO as GPIO
import time

# Set up GPIO mode
GPIO.setmode(GPIO.BOARD)  # Use physical pin numbering

# Define GPIO pins for each LED
RED_LED_PIN = 3
YELLOW_LED_PIN = 4
GREEN_LED_PIN = 5

# Set up GPIO pins as output
GPIO.setup(RED_LED_PIN, GPIO.OUT)
GPIO.setup(YELLOW_LED_PIN, GPIO.OUT)
GPIO.setup(GREEN_LED_PIN, GPIO.OUT)
```

Copyright reserved

```
try:
    while True:
        # RED LED - "Do Not Disturb" mode
        GPIO.output(RED_LED_PIN, GPIO.HIGH)  # Turn on RED LED
        time.sleep(5)  # Keep it on for 5 seconds
        GPIO.output(RED_LED_PIN, GPIO.LOW)   # Turn off RED LED

        # YELLOW LED - "Break Time"
        GPIO.output(YELLOW_LED_PIN, GPIO.HIGH)  # Turn on YELLOW LED
        time.sleep(2)  # Keep it on for 2 seconds
        GPIO.output(YELLOW_LED_PIN, GPIO.LOW)   # Turn off YELLOW LED

        # GREEN LED - "Class in Session"
        GPIO.output(GREEN_LED_PIN, GPIO.HIGH)  # Turn on GREEN LED
        time.sleep(5)  # Keep it on for 5 seconds
        GPIO.output(GREEN_LED_PIN, GPIO.LOW)   # Turn off GREEN LED

except KeyboardInterrupt:
    # Clean up GPIO settings on keyboard interrupt (Ctrl + C)
    GPIO.cleanup()

finally:
    # Ensure GPIO cleanup is done in any case
    GPIO.cleanup()
```

(14)

3.3 Code SAVED and PRINTED from the IDE. (2)

[30]

TOTAL: 80

Copyright reserved