higher education & training

Department:
Higher Education and Training
REPUBLIC OF SOUTH AFRICA

MARKING GUIDELINE

NATIONAL CERTIFICATE (VOCATIONAL)

REFRIGERATION PRINCIPLES
NQF LEVEL 2

22 November 2024

This marking guideline consists of 5 pages.

Copyright reserved

QUESTION 1

1.1

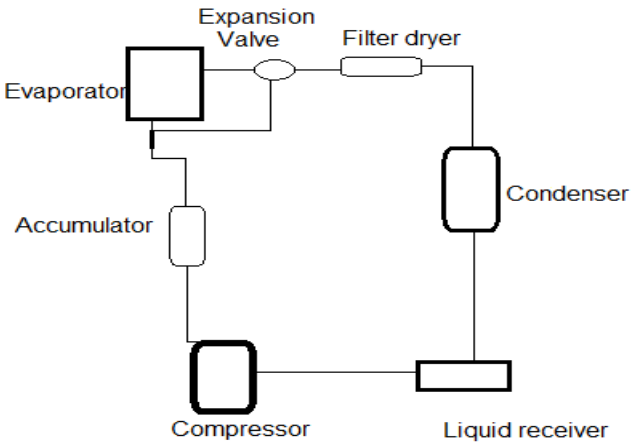

(9)

1.2 1.2.1 To protect against off-cycle migration of refrigerant back into the compressor by heating a refrigerant oil mixture.✓✓

1.2.2 To dampen or muffle pulsations and noise created by the discharge gas.✓✓

(2 × 2) (4)

1.3 93 °C (1)

1.4 Sub-cooled liquid (1)

[15]

QUESTION 2

2.1
- Alternating current is an electrical current that reverses its direction at regular intervals.✓✓
- Direct current is an electrical current that flows in one direction and does not reverse its direction of flow.✓✓ (2 × 2) (4)

2.2 2.2.1 When a circuit is supplying energy to a number of loads that are connected in series. (1)

2.2.2 When a group of parallel-connected receptive devices in an electrical current is arranged in a circuit in series.✓✓ (2)

2.3

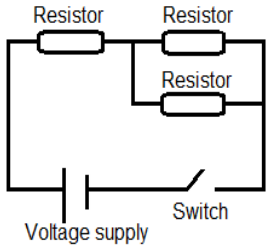

(2)

2.4 Good (1)

[10]

QUESTION 3

3.1 Multi meter (1)

3.2
- One fits over the tube
- Other one fits inside the tube (2 × 1) (2)

3.3
3.3.1 Low-pressure gauge
3.3.2 High-pressure gauge
3.3.3 Valve
3.3.4 High-pressure service hose
3.3.5 Service hose for purging and charging
3.3.6 Low-pressure service hose
(6 × 1) (6)

3.4
- Never exert too much pressure at once.
- Use oil to obtain a better finish.
- Keep the flaring tool clean and well-oiled when not in use.
- Do not hammer on it.
- Do not damage the threads on the yoke. (Any 6 × 1) (3)

[12]

QUESTION 4

4.1
4.1.1 R22
4.1.2 R410A
4.1.3 R404A
(3 × 1) (3)

4.2
4.2.1 Goggles
4.2.2 Gloves
4.2.3 Overalls
(3 × 1) (3)

4.3
- Inform the fire department immediately.
- Evacuate all people working in the area. (2 × 1) (2)

[8]

QUESTION 5

5.1
- To prevent any foreign matter from finding its way into valves, compressors or other equipment where it can cause damage.✓✓
- The pipe must be kept dry to prevent corrosion as well as contamination of lubricants used in the refrigeration system.✓✓ (2 × 2) (4)

5.2
- Condenser
- Evaporator (2 × 1) (2)

Copyright reserved

5.3
- Silver solder is used in silver soldering; it melts at a higher temperature than soft solder.✓✓
- A brass filler material which flows into the area of the joint is used in brazing.✓✓

(2 × 2) (4)

5.4 Reducing coupling (1)

5.5 A solvent is a chemical substance that can dissolve, suspend or extract other materials.✓✓ (2)

5.6
5.6.1 B
5.6.2 C
5.6.3 A

(3 × 1) (3)

5.7 4 °C (1)

5.8
- Inconsistent temperature
- Overloaded equipment
- High running costs
- High maintenance costs
- Inefficient energy consumption
- High condensation in the system
- Increase in the noise of equipment

(Any 5 × 1) (5)
[22]

QUESTION 6

6.1
6.1.1 A crimping tool is used to crimp ferrules which are join two conductors.✓✓

6.1.2 An open-ended spanner is used to slide over the bolt or nut from the side.✓✓

6.1.3 A cable knife is used to cut insulation off a conductor, or remove the PVC covering around the armouring of an armoured cable.✓✓

6.1.4 A wire stripper is used to strip the insulation off a conductor.✓✓

(4 × 2) (8)

6.2
6.2.1 Taper key
6.2.2 Gib-head key
6.2.3 Feather key
6.2.4 Woodruff key

(4 × 1) (4)
[12]

Copyright reserved

QUESTION 7

7.1 B (1)

7.2 7.2.1
- Type of refrigerant
- Water capacity in litres
- Tare mass in kilograms (3)

7.2.2 Maximum gross mass = TM +(0,7 × WC)
= 12,4 +(0,7 + 26,8)✓
= 31,16 kg✓ (2)

7.3 Mass of refrigerant transferred = Final gross mass + Original gross mass
= 28,4 kg – 12,4 kg✓
= 16 kg✓ (2)

7.4 Evacuation is the process used to remove non-condensable gases and moisture from a refrigeration system.✓✓ (2)

7.5 7.5.1 Vacuum pump (1)

7.5.2 The moisture starts a chemical reaction inside the system by creating acid, which may damage the system.✓✓ (2)

7.5.3 If oil is contaminated, it eventually turns into sludge that will damage the compressor.✓✓ (2)

7.6 7.6.1 The flange bolt must be tightened.✓✓

7.6.2 The refrigerant must be recovered and the fault be rectified.✓✓
(2 × 1) (2)

7.7 Soap bubble method (1)

7.8
- Small leaks are very difficult to detect.
- Testing can take a long time.
- Large leaks are very difficult to find. (3)

[21]

TOTAL: 100

Copyright reserved