higher education & training

Department:
Higher Education and Training
REPUBLIC OF SOUTH AFRICA

MARKING GUIDELINE

NATIONAL CERTIFICATE (VOCATIONAL)

RENEWABLE ENERGY TECHNOLOGIES
NQF LEVEL 2

22 November 2024

This marking guideline consists of 6 pages.

Copyright reserved

QUESTION 1

1.1
- Global warming is the progressive gradual rise of the Earth's average surface temperature.
- It is thought to be caused in part by increased concentrations of greenhouse gas (GHG) in the atmosphere. (2)

1.2
- Commitment 1 – Rollout of Solar Water Heaters:✓
  Government commits to a target of ensuring the installation.
  of 1 million solar water heaters at household level by 2014.✓
- Commitment 2 – Investment in the Green Economy:✓ The parties to this accord recognise that new sources of funding and finance will need to be developed and tapped into to ensure that green economy investment levels are rapidly improved.✓
- Commitment 3 – Rollout of Renewable Energy:✓ Government commits to the procurement of renewable energy as part of the plan to expand the energy-generation capacity of the country. To this end, Government will secure commitments for the supply of 3 725 MW of renewable energy by 2016 as a first step to realising the goals for renewable energy under the Integrated Resource Plan 2010-2030.✓
- Commitment 4 – Energy Efficiency: Energy efficiency supports several key government objectives, including enhancing business competitiveness, strengthening energy security, creating jobs, reducing the economy's energy-intensity and transitioning to a lower carbon economy as well as improving environmental quality.
- Commitment 5 – Waste Recycling, Reuse and Recovery: A range of industries are engaged in a variety of activities to recycle, reuse or recover waste.
- Commitment 6 – Bioenergy: The production of biofuels for mandatory blending in the petrol and diesel national fuel pool can contribute to lower carbon emissions, greater fuel supply security and significant job creation in the growing of feed stocks that do not compete with local food needs.
- Commitment 7 – Clean-Coal Initiatives: The coal resources available in South Africa are massive and need to be exploited in a manner that recognises and minimises the damage already done by greenhouse gas emission associated with coal exploitation.
- Commitment 8 – Retrofitting: One of the opportunities to green the economy is to identify ways to improve the energy efficiency of workplaces, homes and power stations.
- Commitment 9 – Reducing Carbon-Emission on our Roads: All parties to this accord commit to promote among South Africans the value and importance of public transport as a means, among other advantages, of reducing carbon emissions.
- Commitment 10 – Electrification of Poor Communities and Reduction of Fossil-Fuel Open Fire Cooking and Heating: Government recognises that at least 3 million households still rely on traditional energy carriers like candles and firewood, leading to continued environmental degradation particularly in rural areas and in urban informal settlements.

Copyright reserved

- Commitment 11 – Economic Development in the Green Economy: Promotion of localisation, youth employment, cooperatives and skills development.
- Commitment 12 – Cooperation around the United Nations Cop 17 and its follow-up talks on climate change. (Any 3 × 2) (6)

1.3
- To attain coal or oil through mining or drilling,✓ results in detrimental impacts on the environment.✓
- Combustion of fossil fuels emits a variety of air pollutants✓ that present a health hazard, either directly as in the case of particulates, or indirectly as in the case of greenhouse gases.✓
- Other severe impacts related to fossil fuels water pollution, biodiversity losses (plants and animals) and cumulative impacts on ecosystem functioning✓ and services (the ability of the environment to clean air and water etc.).✓
- Carbon emissions from the combustion of fossil fuels have significantly raised the concentration of greenhouse gases in the atmosphere.✓ The emission of greenhouse gases contributes to global warming and has adverse impacts on food production, water supply and weather.✓
- When harmful fossil fuel emissions are not priced, the unregulated market will overuse fossil fuels and underuse substitutes, such as renewable energy resources.
- The geological mechanism involved in the formation of these fuels and the extremely long time periods result in the fact that these fuels are essentially non-renewable resources.
- Fossil fuel resources for electrical energy generation, such as coal, gas and liquid fuels are not limitless, and resources may become depleted.

(Any appropriate answer 4 × 2) (8)

1.4
1.4.1 B
1.4.2 A
1.4.3 F
1.4.4 D

(4 × 1) (4)
[20]

QUESTION 2

2.1 2.1.1 LED TV (1)

2.1.2 LED = (57/1000) × 5 × 365 × 1,20✓ = R 124,83✓ (lower in cost)✓

LCD = (70/1000) × 5 × 365 × 1,20✓ = R 153,30✓

OLED = (98/1000) × 5 × 365 × 1,20✓ = R 214,62✓ (7)

2.2 2.2.1
- The ammeter should be placed at position 1.✓
- An ammeter is a low resistance device and is connected in series.
- The whole circuit current flows through the ammeter for an accurate measurement.

2.2.2
- The voltmeter can be placed at position 3 or 4.
- A voltmeter is a high resistance device.
- It should be connected in parallel.

2.2.3

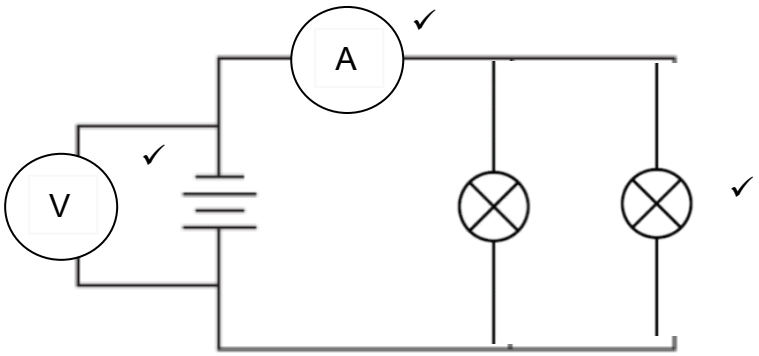

Source: https://www.aplusphysics.com/courses/honors/circuits/meters.html

FIGURE 1

(3 × 3) (9)

2.3 2.3.1 Current is directly proportional to potential✓ and inversely proportional to resistance provided that the temperature in the circuit remains constant.✓ (2)

2.3.2 Multimeter (1)

2.3.3 R = V/I = 230/15 = 15,333 Ω (3)

2.3.4
- The current drawn would increase.
- The resistance would decrease. (2)

[25]

QUESTION 3

3.1 3.1.1
- If the current is strong enough, the amount of heat generated can be sufficient to burn the tissue. Physiologically, the effect is the same as damage caused by an open flame or any other high-temperature source of heat, except that electrical power can burn tissue well beneath the skin, meaning it can even burn internal organs.
- Another effect of an electric current on the body is electric shock (electrocution). If the strength of an electric current is enough and is conducted through your body, its effect will overload the nervous system and prevent the employee from being able to actuate his muscles appropriately.
- An electric shock itself could indirectly result in injury by causing the employee to fall from a ladder or roof or putting parts of his body into harm's way. (6)

3.1.2 The main aim is to prevent accidents from occurring because of the unintended activation of electrical equipment. (2)

3.1.3 If the employee had verified that the equipment was completely de-energised by attempting to cycle it (verification of isolation) and had verified that the equipment was completely de-energised by testing for potential difference with a voltmeter (testing for isolation) he/she could have prevented an electrical shock.
Tag-out will assist in communicating to the rest of the employees, that work is being performed on the panel. (4)
[12]

QUESTION 4

4.1 4.1.1 I–V curves are used to indicate the performance of a module✓ allowing determination of the maximum power point (MPP).✓ (2)

4.1.2 Conceptually, the I-V curve represents the combinations of current and potential difference✓ at which the module operates, if the irradiance and cell temperature could be held constant.✓ (2)

4.1.3 A decrease in irradiance levels will decrease current but will not alter potential.✓✓ Increased cell temperature will lower potential and but has little effect on current.✓✓ (4)

4.2 4.2.1 Small-scale embedded generation (1)

4.2.2 Grid-connected PV systems are connected to the national grid✓ through inverters✓ and do not require batteries for back-up storage.✓ These types of systems only operate when the energy utility (Eskom) is available.✓ In the event of power outage, the system shuts down until utility power is restored.✓ (5)

Copyright reserved

4.2.3

For neatness ✓ and schematic ✓ sequence

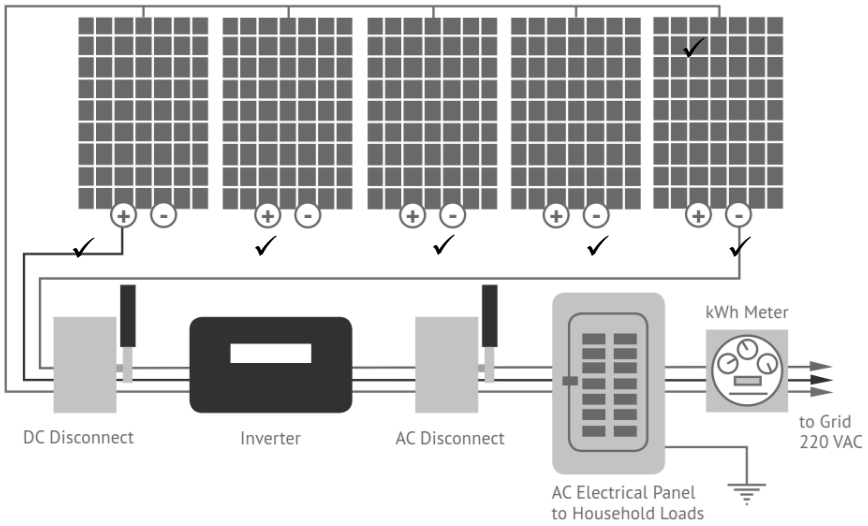

Source: GIZ/S4GJ RET L2 Text book

FIGURE 2 (8)

4.3.1 A – Thin film
B – Mono-crystalline
C – Poly-crystalline (3)

4.3.2 A → 9–12%
B → 14–20%
C → 14–18% (3)

4.3.3 Mono-crystalline (1)

4.3.4 The module with the lower efficiency will need more area/space✓ to meet the demand than a module with higher efficiency.✓ (2)

4.3.5 Generally, PV module performance declines✓ as module temperature rises.✓ Under hot climatic conditions, thin film technologies will generate 5–10 percent more power per year compared to crystalline technologies.✓ (3)

4.3.6 Sand (or silica) (1)

4.3.7 Poly-crystalline (Module C)✓ consists of many crystals giving it a speckled reflective appearance.✓
Mono-crystalline (Module B)✓ have a uniform, smooth texture.✓ (4)

4.3.8 When sunlight is absorbed in a PV cell it transfers its energy to atoms,✓ energises them and knocks electrons out of their orbit.✓ The electrons then move through the PV cell layers✓ and create a charge flow (a DC current).✓ (4)

[43]

TOTAL: 100

Copyright reserved