higher education & training

Department:
Higher Education and Training
REPUBLIC OF SOUTH AFRICA

MARKING GUIDELINE

NATIONAL CERTIFICATE (VOCATIONAL)

ARCHITECTURAL GRAPHICS AND TECHNOLOGY
NQF LEVEL 3
(Second paper)

20 November 2024

This marking guideline consists of 6 pages.

Copyright reserved

QUESTION 1

1.1
- Lack of understanding in the terms of reference on the contract✓
- Interpretation of the contract and client needs and expectations✓
- Technical communication breakdown as far as what the client needs are on the working drawings of the project✓
- No explanation given on the progress of the project✓ (4)

1.2
1.2.1 True
1.2.2 False
1.2.3 False
1.2.4 False
1.2.5 True
1.2.6 False

(6 × 1) (6)
[10]

QUESTION 2

2.1
- Proportion✓ – all parts of the object must relate to one another in size and shape.✓
- Correctness✓ – the detail and the components of the object must be fully and correctly inserted.✓
- Neatness✓ – line work must be neat. The outlines must be darker and bolder than the other lines, such as centre lines, sectioning lines, etc. Construction lines must be feint or erased.✓
- Accuracy✓ – sizes and scale must be as accurate as possible.✓ (4 × 2) (8)

2.2
- The architect designs the structure by creating the plans and drawings that the contractors use to build the structure.✓
- He/she must know the building regulations so that he or she designs a structure that complies with these regulations.✓
- The architect also makes sure that the building is being constructed according to the plans and drawings created to suit the needs of the client.✓
- The architect is responsible for the way the structure looks.✓ (4)

2.3
- The resident engineer can be a civil, geotechnical, electrical or structural engineer.✓
- The resident engineer monitors and verifies that work is done according to the contract documents.✓
- The resident engineer must be able to communicate clearly with contractors, design engineers, utility companies, government and public agencies, the community in which they are working, and, most importantly, the client.✓
- He or she answers contractors' questions and solves difficult problems.✓
- The resident engineer does quality control inspections and scheduling.✓ (5)

[17]

Copyright reserved

QUESTION 3

3.1 3.1.1 Backfill – the replacement of earth into a trench or pier excavation✓ around and against a basement.✓

3.1.2 Fascia board – a board nailed to the ends of the rafters.✓ Below the roof edge.✓

3.1.3 Mesh reinforcements – steel wires welded into a grid of 150 mm x 150 mm squares and embedded in concrete,✓ ties a concrete pad together in the event of cracking.✓

3.1.4 Reinforcement bars – steel bars placed horizontally and/or vertically in the wall to strengthen the wall where there are several openings like doors and windows.✓ It goes right around the house as a perimeter beam.✓

3.1.5 Screed – a layer of mortar laid on the floor surface to finish the surface,✓ so floor covering can be laid on top of it.✓

(5 × 2) (10)

3.2 3.2.1 Section drawings of buildings provide a view of the entire length or width of a building, as if a vertical cut has been made through the building.✓ Individual wall, roof and ceiling sectional drawings may also be provided.✓ A set of plans will frequently contain sectional detail drawings of stairways, windows, doors and truss configurations.✓ (3)

3.2.2 The smaller scale of the larger drawings does not allow for marking dimensions on the smaller features; they provide a clear view of the components within the area of detail.✓
It is important to make use of these enlarged details before attempting to erect the building.✓ (2)

Copyright reserved

3.3

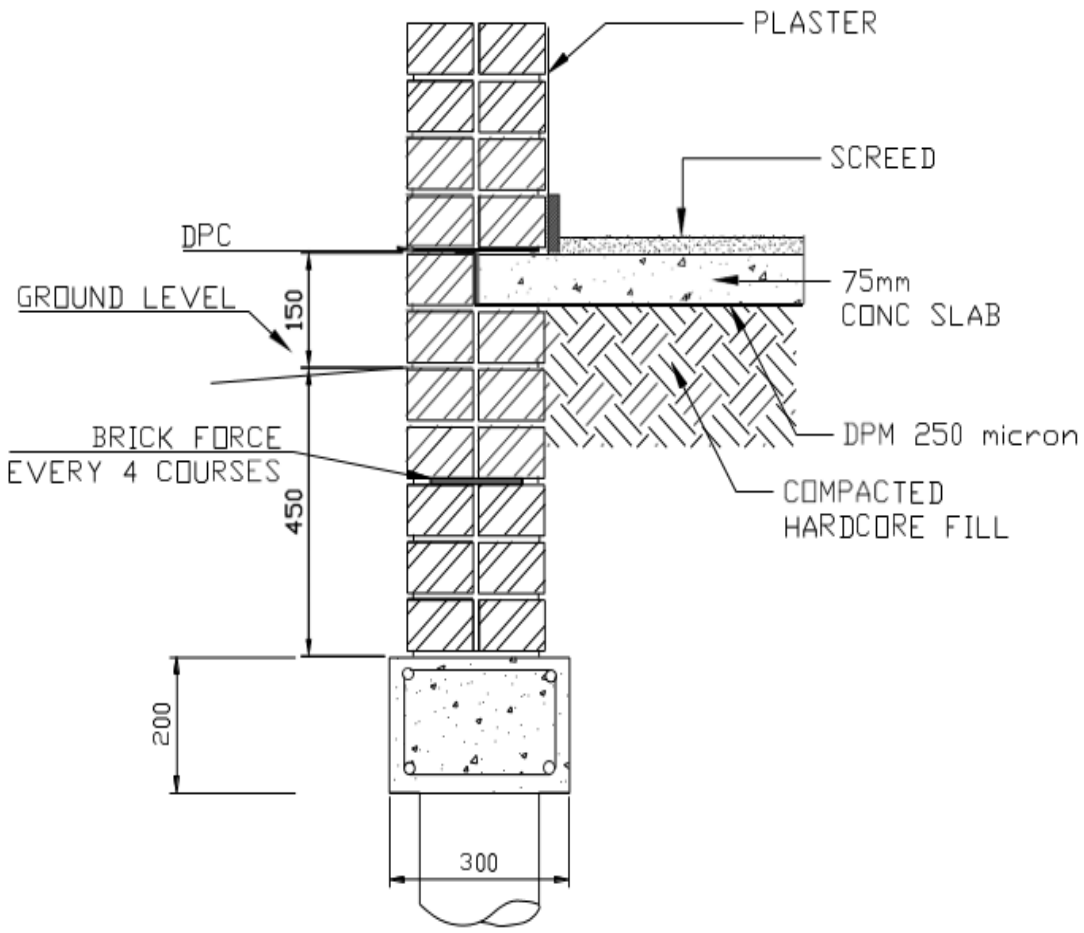

Pile foundation
Scale 1:10

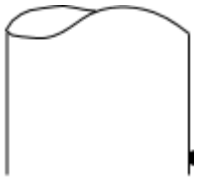

Marks 10 × 1 = 10 annotations
Sketch 5 × 1 = 5 (15)

3.4 ✓ ✓
Rise = Tan 26 × 1614 mm
= 0,787 m✓ (3)
[33]

QUESTION 4

4.1
4.1.1	A
4.1.2	C
4.1.3	E
4.1.4	F
4.1.5	B

(5 × 1) (5)

4.2 4.2.1
- Gable-to-gable roof✓
- Hip roof✓
- Lean-to roof✓
- Flat roof✓
- Conical roof✓ (5)

4.2.2 **Gable-to-Gable**
- Easy and quick to construct.
- Inexpensive
- Especially suited to mass housing

Hip roofs
- Aesthetically pleasing
- Roof is very strong as it lies in the design.

Lean-to roofs
- Easy and quick to construct.
- Inexpensive

Flat roofs
- Easy and quick to construct.
- Inexpensive

Conical roof
- Easy to erect.
- Does not require many fittings, such as brackets and bolts.

(Any 5 × 1*)* (5)

4.2.3
- Mono – this shape may be simple span, multiple spans or cantilevered. Top chord bearing possible.✓
- Dual slope – provides an asymmetric roof appearance✓
- Ridge truss – provides a stepped roof appearance✓
- Cut-off – this shape may be used where a triangular truss will not fit. It is usually stubbed at the jogged exterior or at the change to vaulted ceiling in opposite direction.✓
- Inverted – is used to provide a vaulted ceiling along a portion of the span.✓ (5)

4.2.4
- These trusses are more economical because there are no lap joints. Less timber is used and there is no wastage on site.✓
- Time used in construction is saved because these trusses are generally prefabricated.✓
- Prefabricated trusses are professionally designed and guaranteed.✓ (3)

4.2.5
- Rational designs.✓
- Deemed-to-satisfy requirements.✓ (2)

[25]

QUESTION 5

5.1 5.1.1 Single glazing: Use of a single sheet of glass in a window.✓ Generally, not as energy efficient as insulating glass or other forms of double glazing.✓

5.1.2 French door: Generally, refers to a pair of hinged doors that open from the middle.✓ Also incorporates wider stile-and-rail components around the glass than typical glazed doors.✓

5.1.3 Head: Main horizontal frame member at the top of a window✓ or door.✓

5.1.4 Lintel: A structural component or beam above a window or door opening✓ that supports the wall above.✓ Also referred to as a header.

5.1.5 Panel: Material consisting of wood, latilla, louvers,✓ inserted into the frame formed by stiles, rails, and mulls of a door.✓

(5 × 2) (10)

5.2
- The solid window✓
- The box or sash frame✓ (2)

5.3
- Side-hang casement
- Top-hang casement
- Bottom-hang casement
- Horizontally pivoted
- Vertically pivoted or
- Louvered (3)

[15]

TOTAL: 100

Copyright reserved