higher education & training

Department:
Higher Education and Training
REPUBLIC OF SOUTH AFRICA

MARKING GUIDELINE

NATIONAL CERTIFICATE (VOCATIONAL)

PROCESS CONTROL
NQF LEVEL 3

20 November 2024

This marking guideline consists of 6 pages.

Copyright reserved

SECTION A

QUESTION 1

1.1 Sight-glass gauge
1.2 Recorder
1.3 Dead band
1.4 Multivariable system
1.5 Open fail-safe system

(5 × 1) **[5]**

QUESTION 2

2.1 C
2.2 E
2.3 B
2.4 D
2.5 F

(5 × 1) **[5]**

QUESTION 3

3.1 True
3.2 False
3.3 False
3.4 True
3.5 True
3.6 True
3.7 True
3.8 True
3.9 True
3.10 True

(10 × 1) **[10]**

TOTAL SECTION A: 20

SECTION B

QUESTION 4

4.1
- Pneumatic
- Electrical
- Radio (3)

4.2 4.2.1 Cubic metre per hour
4.2.2 Pound per square inch
(2 × 1) (2)

4.3
- Advantage: Cabling installation is not needed.
- Disadvantage: Other sources can cause interference, e.g. the noise one sometimes notice on a radio. (1 + 1) (2)

4.4 4.4.1 A transmission signal is the data sent from one device to another by a specific method. (2)

4.4.2
- Current transmission
- Voltage transmission
- Pulse transmission
- Frequency transmission
- Tone transmission (Any 4 × 1) (4)

4.5 The accuracy of a measurement describes the closeness with which the measurement approaches the true value of the variable being measured,✓ whereas precision is the closeness with which repeated measurements of the same quantity agree with each other.✓ (2)
[15]

QUESTION 5

5.1 5.1.1 When liquid is placed in a glass tube, the top of the liquid moves with a change in temperature.✓ The volumetric expansion of liquids is typically many times greater than that of glass.✓ Since the volume of the liquid changes more than the change in the glass,✓ the liquid moves up or down in the tube with changes in temperature.✓ (4)

5.1.2
- Alcohol
- Mercury (2)

5.1.3 Mercury is classified as a hazardous material✓ and spills must be handled in accordance with federal, state and local environmental statutes and regulations✓ when the glass tube breaks. (2)

Copyright reserved

5.2 5.2.1 Two rotating oval gears with synchronised teeth squeeze✓ a precise amount fluid through the meter for each rotation.✓

5.2.2 It is made up of an equally divided, rotating impeller mounted inside the meter casing✓ and it is always in contact with the casing.✓

OR

A precise volume of fluid is swept to the meter outlet from each division as the vane rotates.✓ The revolution of the impeller is counted and registered as unit of volume.✓

5.2.3 It counts the exact amount of fluid passing through it and adds the amount together to determine the total flow.✓ Attached to this meter is a counter that shows the total flow in litre.✓

(3 × 2) (6)

5.3 5.3.1

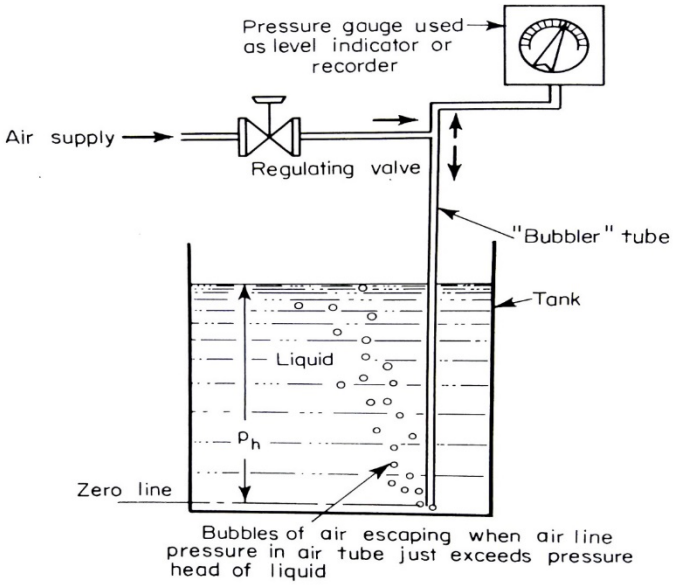

(1 for each correctly labelled part) (6)

5.3.2 A gas is slowly fed into the bubbler system until the pressure is equal to the hydrostatic head of the liquid in the tank.✓ At that point, the gas flow bubbles out of the end of the bubble tube.✓ The maximum liquid level will therefore determine the required gas pressure.✓ As the liquid level decreases, the head pressure at the bottom of the tube decreases allowing more gas to escape.✓ The pressure in the tube is directly proportional to the liquid height✓ and the scale will therefore be linear.✓ (6)

5.4 5.4.1 Relates the change in materials' linear dimensions to a change in temperature

5.4.2 Amount of heat energy per unit of charge at a specific location

5.4.3 Flow in which the fluid undergoes irregular fluctuations and mixing

5.4.4 Velocity of a fluid in terms of the head or static pressure needed to produce that velocity

(4 × 1) (4)
[30]

QUESTION 6

6.1 6.1.1 Differential pressure
6.1.2 Recorder
6.1.3 Temperature indicator and recorder
6.1.4 Level controller
6.1.5 Position indicator

(5 × 1) (5)

6.2 6.2.1



6.2.2

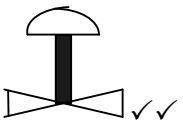

6.2.3

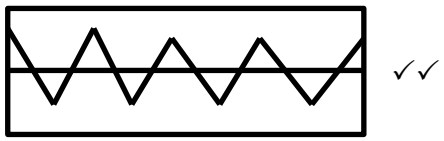

(3 × 2) (6)

6.3 An open fail-system is a system that allows a circuit breaker or any other component to trip,✓ thereby breaking a circuit connection by opening a switch.✓ This configuration operates under an open condition where the system shuts down completely✓ or a relay is used to isolate the failed component while the rest of the operations continues. ✓ (4)
[15]

QUESTION 7

7.1 7.1.1 The derivative control is a function of the rate of change of controlled variable from its set point.✓✓

7.1.2 Proportional action produces a given output that is directly proportional to the error.✓✓

OR

The controller output is proportional to the deviation between the controlled variable and the desired set point.✓✓

7.1.3 Integral action is the action of a controller where the output signal changes proportionally at a rate of change of the measured error.✓✓

(3 × 2) (6)

7.2

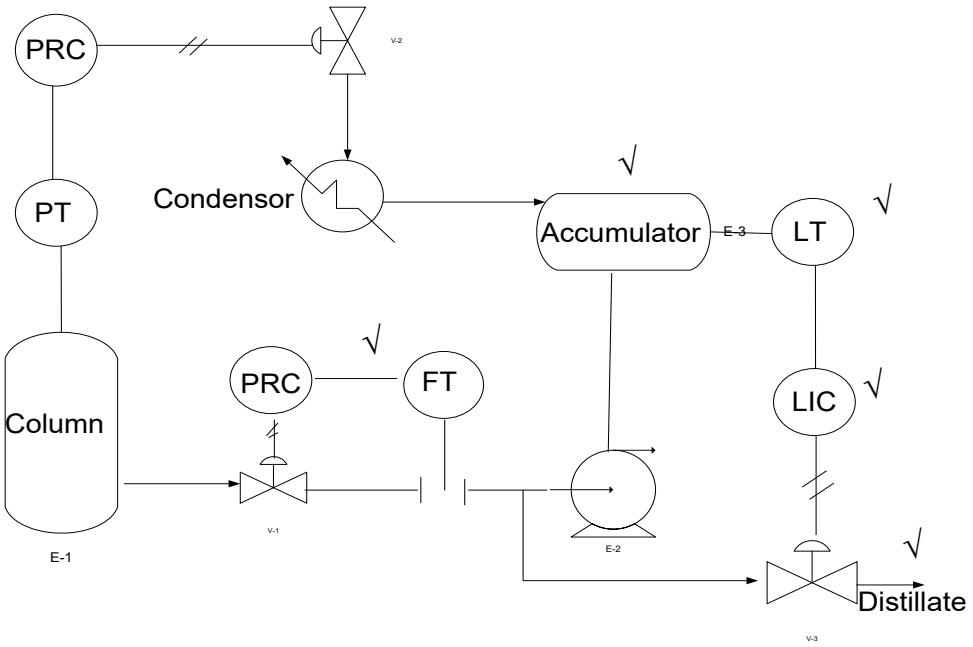

(8)

7.3
- Single-element drum-level control system
- Two-element drum-level control system
- Three-element drum-level control system (3 × 2) (6)

[20]

TOTAL SECTION B: 80
GRAND TOTAL: 100

Copyright reserved