higher education & training

Department:
Higher Education and Training
REPUBLIC OF SOUTH AFRICA

MARKING GUIDELINE

NATIONAL CERTIFICATE (VOCATIONAL)

ARCHITECTURAL GRAPHICS AND TECHNOLOGY
NQF LEVEL 3
(First paper)

14 November 2024

This marking guideline consists of 13 pages.

Copyright reserved

QUESTION 1.1

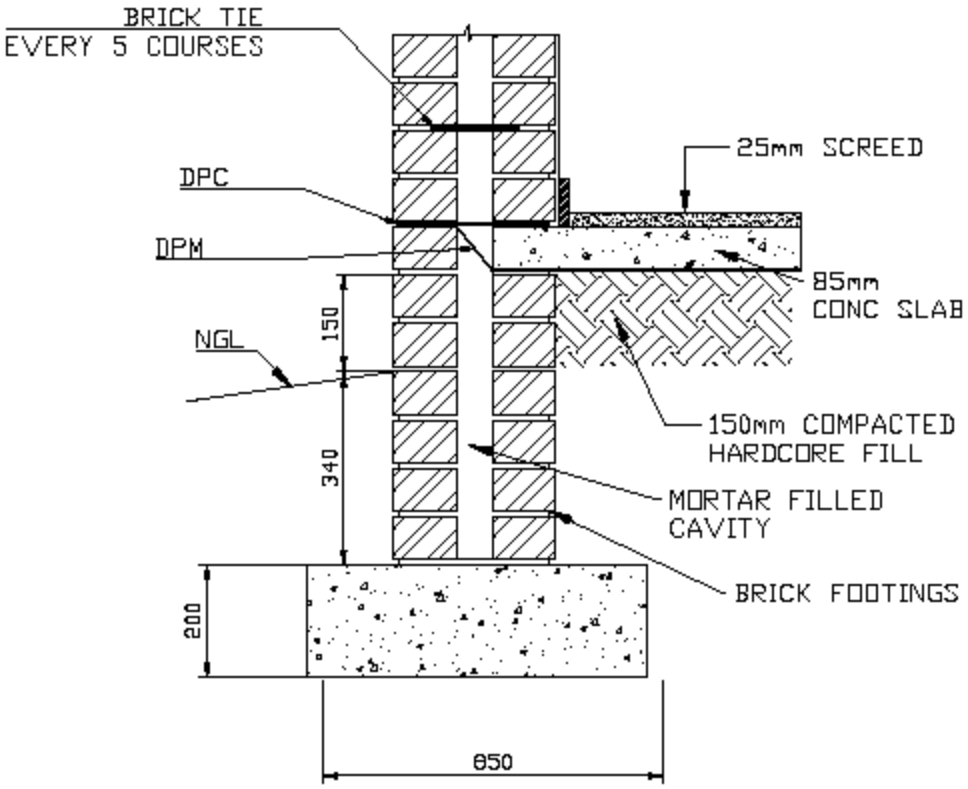

SECTION THROUNG CAVITY WALL STRIP FOUNDATION
SCALE 1:10

QUESTION 1.1: RUBRIC			
PART OF DRAWING	**MARKING CRITERIA**	**POSSIBLE MARK**	**REMARKS**
Excavation depth	Correctness	2	
	Dimensioning	4	Foundation; excavation
	Labelling	1	
Concrete foundation, footing, foundation walls, hard core, concrete floor, wall tie	Correctness	6	Footing, wall, slab
	Hatching	4	Foundation wall and footing
	Labelling	5	
Wall, plaster, screed	Correctness	3	
	Hatching	3	
	Labelling	3	
DPC; DPM and ground level	Correctness	3	
	Hatching	1	
	Labelling	3	
	Subtotal	38	Overall correctness
	Divide by	3,8	
	Correctness	**10**	
	Line work	**4**	
	Accuracy	**4**	
	Title and scale	**2**	
	Balanced layout and Neatness	**2**	
	TOTAL	**22**	

NOTE: No marks should be allocated for any part of the drawing in the incorrect position other than the marks allocated for hatching of that component.

Marks should be allocated for neatness, correct title and scale if the drawing is completely incorrect. **[22]**

Copyright reserved

QUESTION 2.1

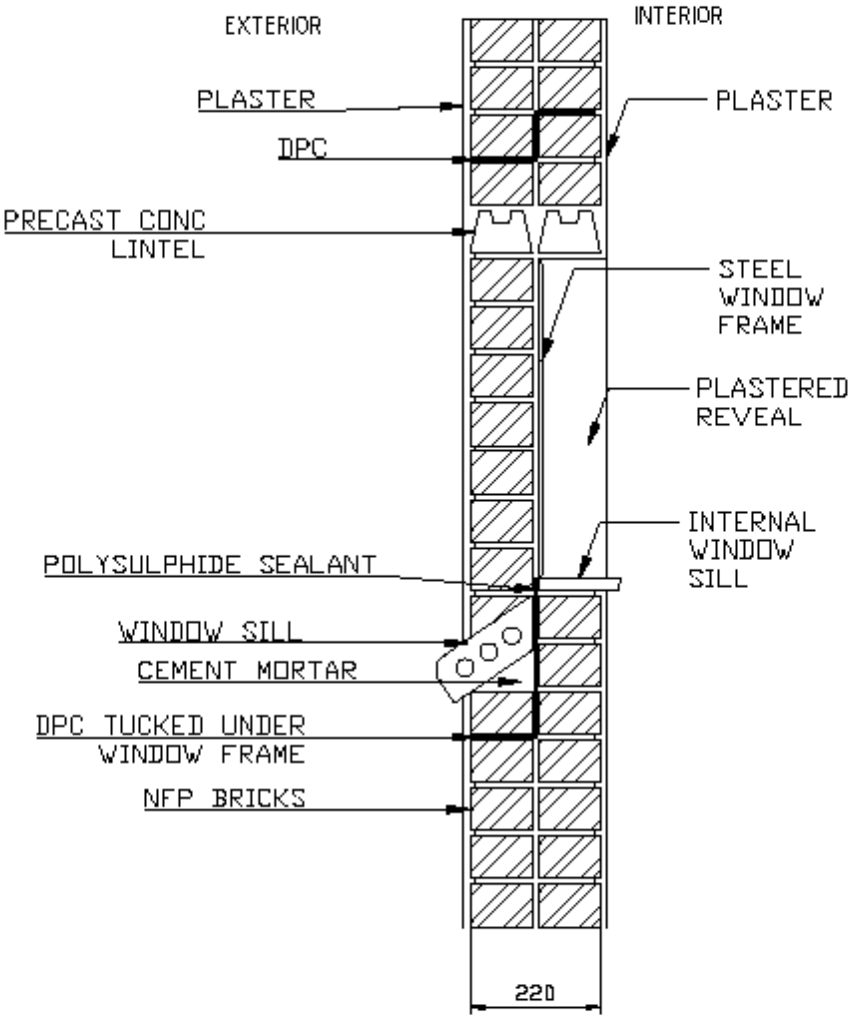

SECTION STEEL WINDOW
SCALE 1:10

QUESTION 2.1: RUBRIC			
PART OF DRAWING	**MARKING CRITERIA**	**POSSIBLE MARK**	**REMARKS**
Load bearing wall	Correctness	2	
	Dimension	1	
	Labelling	2	Interior; exterior
Bricks, window frame, sealant, lintels	Correctness	6	Lintel, window frame
	Hatching	2	Bricks
	Labelling	4	
Wall, plaster, reveal	Correctness	3	
	Hatching	3	
	Labelling	3	
DPC; window sills	Correctness	4	
	Hatching	2	DPC, window sill brick
	Labelling	4	
	Subtotal	36	Overall correctness
	Divide by	3,6	
	Correctness	**10**	
	Line work	**5**	
	Accuracy	**4**	
	Title and scale	**2**	
	Balanced layout and Neatness	**2**	
	TOTAL	**23**	

NOTE: No marks should be allocated for any part of the drawing in the incorrect position other than the marks allocated for hatching of that component.

Marks should be allocated for neatness, correct title and scale if the drawing is completely incorrect. **[23]**

Copyright reserved

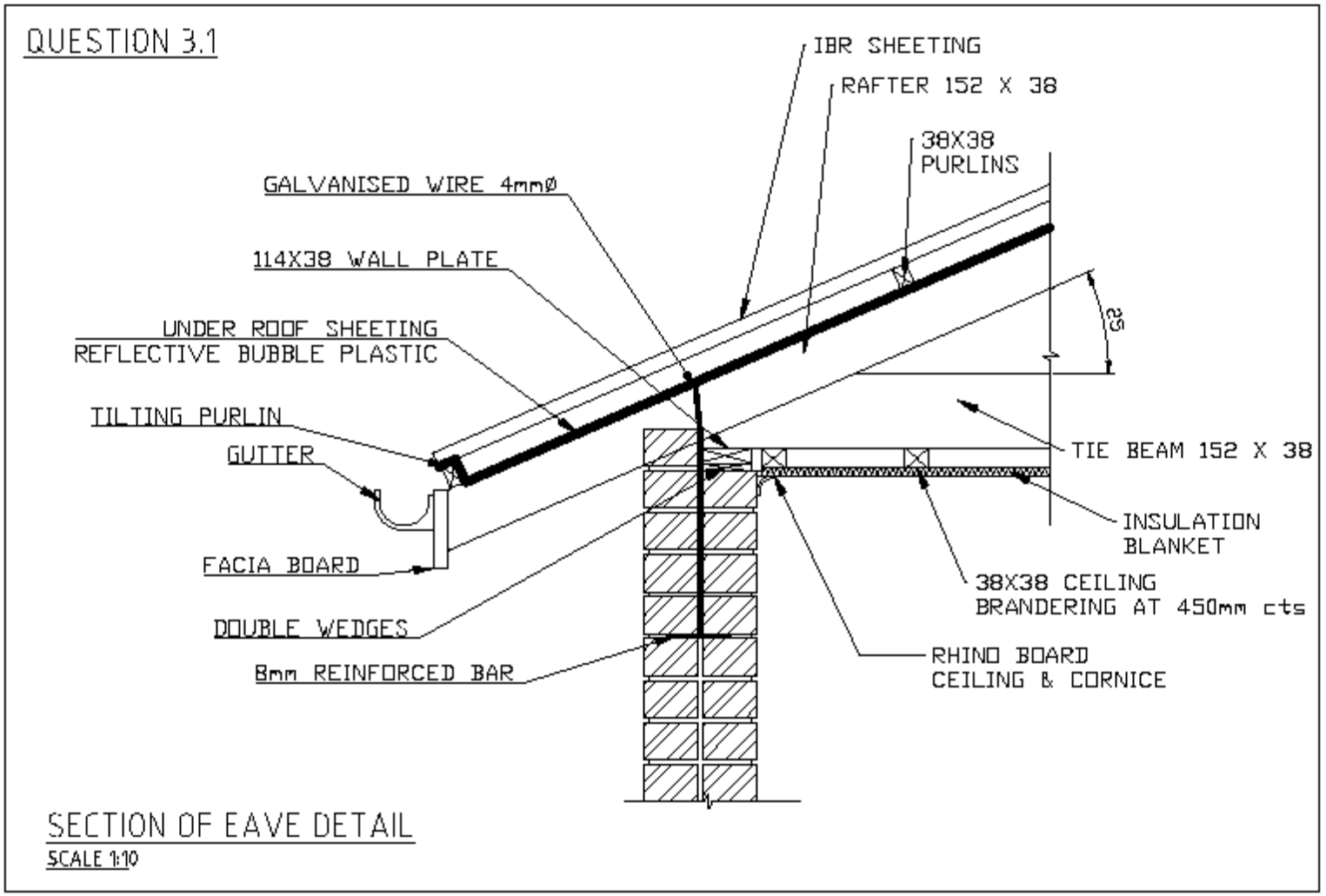

Copyright reserved

QUESTION 3.1: RUBRIC			
PART OF DRAWING	**MARKING CRITERIA**	**POSSIBLE MARK**	**REMARKS**
Rafter and tie beam detail with pitch. Purlin, brandering, wall plate	Correctness	6	
	Dimension	4	
	Labelling	4	
Wall, reinforced bar under roof with wire	Correctness	3	
	Hatching	3	
	Labelling	2	
Ceiling, insulation, cornice and roof cover with sheeting	Correctness	5	
	Hatching	2	
	Labelling	5	
Gutter on fascia with tilting purlin	Correctness	3	
	Hatching	1	Tilting purlin
	Labelling	3	
	Subtotal	41	Overall correctness
	Divide by	4.1	
	Correctness	**10**	
	Line work	**5**	
	Accuracy	**4**	
	Title & scale	**2**	
	Balanced layout and Neatness	**4**	
	TOTAL	**25**	

NOTE: No marks should be allocated for any part of the drawing in the incorrect position other than the marks allocated for hatching of that component.

Marks should be allocated for neatness, correct title and scale if the drawing is completely incorrect. **[25]**

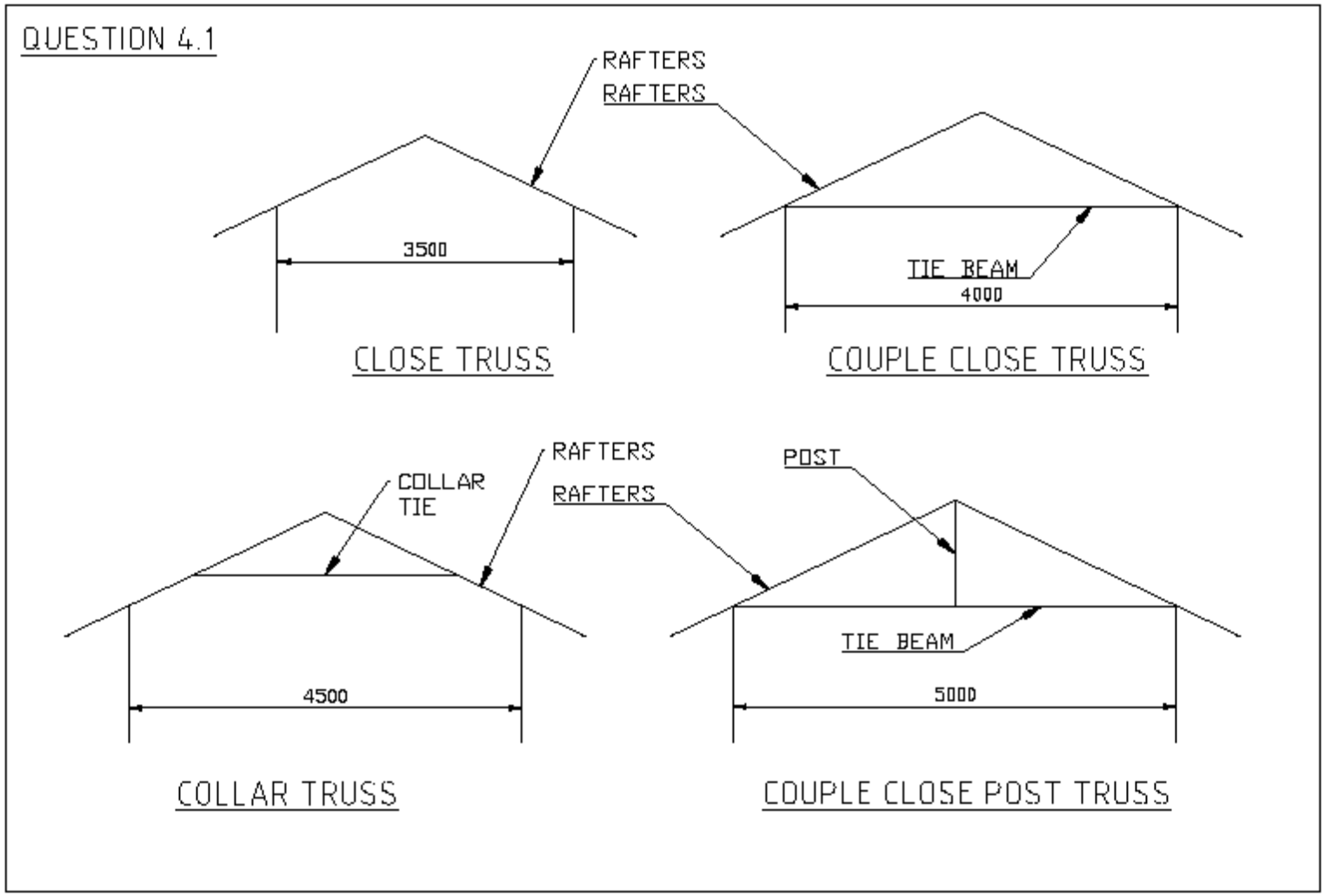

Copyright reserved

QUESTION 4.1 RUBRIC			
PART OF DRAWING	**MARKING CRITERIA**	**POSSIBLE MARK**	**REMARKS**
Door type: Layout	Correctness	3	
	Dimension	2	
	Labelling	5	
	Subtotal	10	Overall correctness
	Divide by	2	
	Correctness	**5**	
	Line work	**2**	
	Accuracy	**1**	
	Title and scale	**1**	
	Balanced layout and Neatness	**1**	
	TOTAL	**10**	

NOTE: No marks should be allocated for any part of the drawing in the incorrect position other than the marks allocated for hatching of that component.

Marks should be allocated for neatness, correct title and scale if the drawing is completely incorrect. **[10]**

QUESTION 4.2

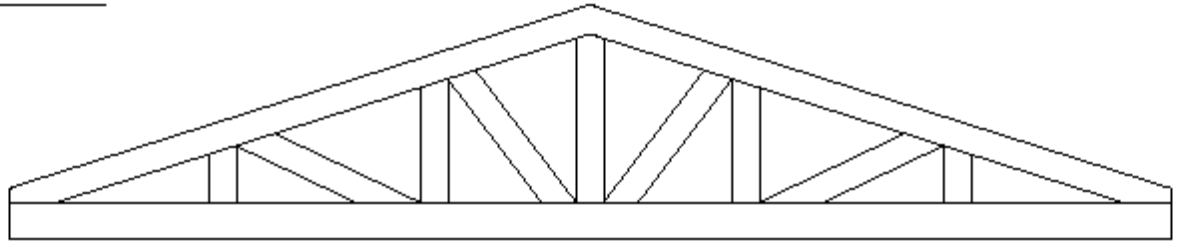

HOWE TRUSS

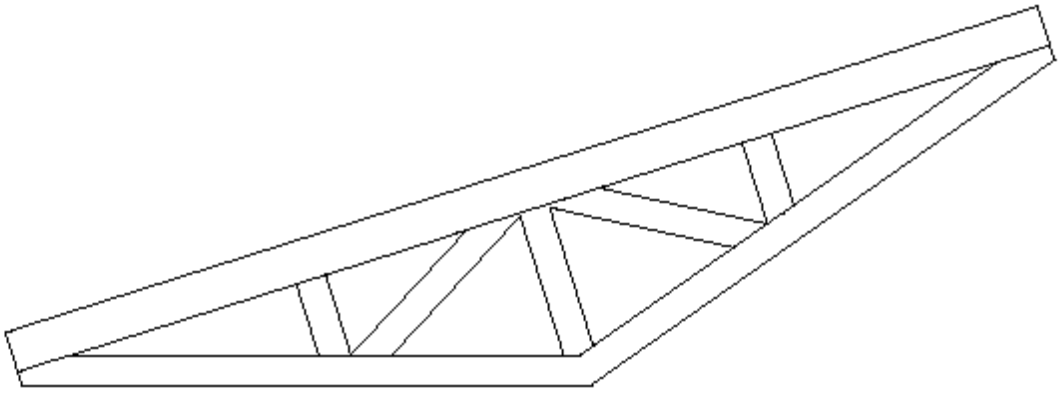

INVERTED TRUSS

Copyright reserved

QUESTION 4.2 RUBRIC			
PART OF DRAWING	**MARKING CRITERIA**	**POSSIBLE MARK**	**REMARKS**
Door type: Layout	Configuration	4	
	Double lines	2	
	Subtotal	6	Overall correctness
	Divide by	3	
	Correctness	**2**	
	Line work	**1**	
	Title & scale	**1**	
	Balanced layout and Neatness	**1**	
	TOTAL	**5**	

NOTE: No marks should be allocated for any part of the drawing in the incorrect position other than the marks allocated for hatching of that component.

Marks should be allocated for neatness, correct title and scale if the drawing is completely incorrect. **[5]**

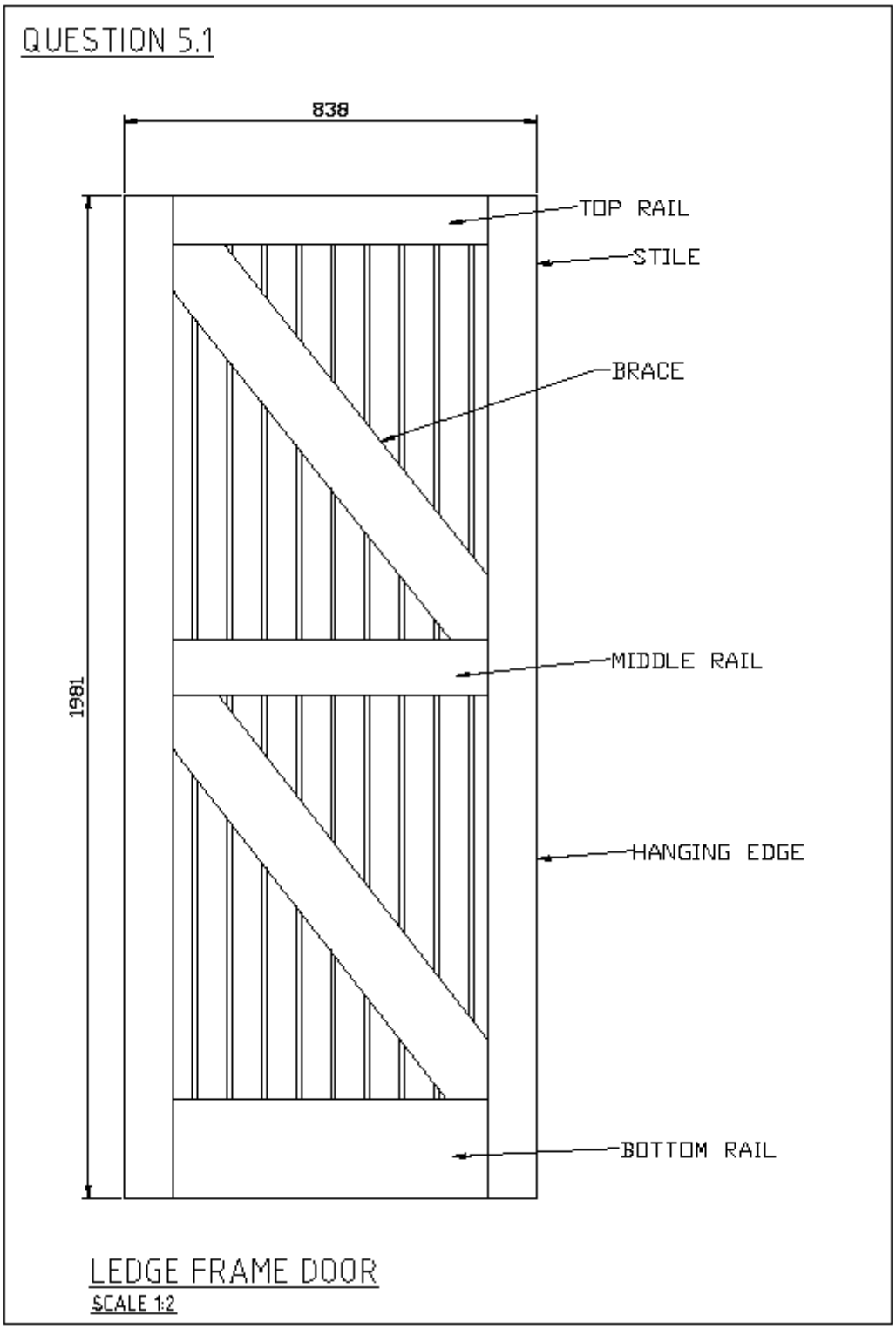
QUESTION 5.1
838
1981
TOP RAIL
STILE
BRACE
MIDDLE RAIL
HANGING EDGE
BOTTOM RAIL
LEDGE FRAME DOOR
SCALE 1:2

QUESTION 5.1: RUBRIC			
PART OF DRAWING	**MARKING CRITERIA**	**POSSIBLE MARK**	**REMARKS**
Door Layout	Correctness	2	
	Hatching	1	Vertical Paneling
	Dimension	2	
Bracing	Correctness	2	
	Labelling	1	
Frame	Correctness	4	Side, top, middle, bottom rails
	Labelling	4	
	Subtotal	**16**	Overall correctness
	Divide by	**3.2**	
	Correctness	**5**	
	Line work	**2**	
	Accuracy	**2**	
	Balanced layout and Neatness	**1**	
	TOTAL	**10**	

NOTE: No marks should be allocated for any part of the drawing in the incorrect position other than the marks allocated for hatching of that component.

Marks should be allocated for neatness, correct title and scale if the drawing is completely incorrect. **[10]**

TOTAL: 100

Copyright reserved