higher education & training

Department:
Higher Education and Training
REPUBLIC OF SOUTH AFRICA

MARKING GUIDELINE

NATIONAL CERTIFICATE (VOCATIONAL)

MECHATRONIC SYSTEMS
NQF LEVEL 4

22 November 2024

This marking guideline consists of 7 pages.

Copyright reserved

QUESTION 1

1.1 1.1.1 Project management is the application of knowledge, experience and skills to meet the project objectives.✓✓ (1 × 2)

OR

Project management is the application of processes, methods, skills, knowledge and experience to achieve specific project objectives according to the project acceptance criteria within agreed parameters.✓✓ (2)

1.1.2 Project planning is the selection of a systematic method/process by which a product is to be manufactured economically.✓✓ (1 × 2)

OR

Project planning is a discipline addressing how to complete a project in a certain timeframe, usually with defined stages and designated resources.✓✓ (2)

1.2

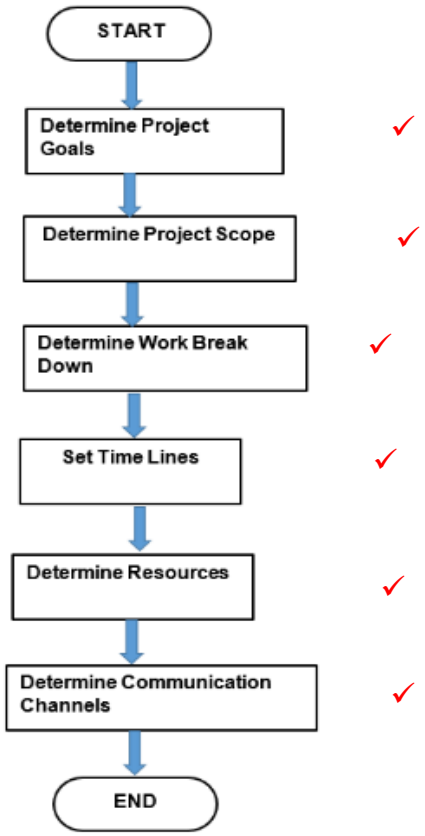

(6 × 1) (6)
[10]

QUESTION 2

2.1 A design brief is a short description of up to two or three lines stating what is required without too much technical jargon.✓✓

Whereas

A design specification is a detailed document which sets out the product process exactly.✓✓ (2 × 2) (4)

2.2

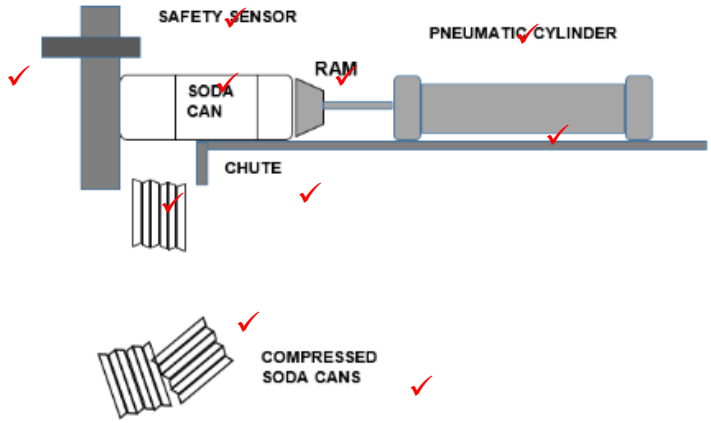

(marker to use discretion) (10 × 1) (10)

2.3
- Magazines
- Catalogues
- Library
- Internet
- TV
- Technical manuals
- Engineering firms

(Other related projects) (Any relevant SIX)✓✓✓✓✓✓ (6 × 1) (6)

2.4

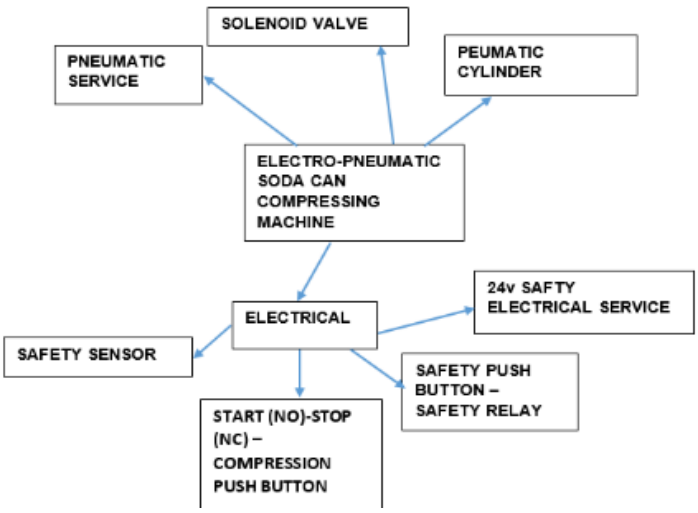

Any relevant correct component ✓✓✓✓✓(5 × 1) (5)

[25]

QUESTION 3

3.1
- Sequence chart✓
- Time chart✓
- Flow chart✓ (3)

3.2 An evaluation list is made up so that various operational tests can be carried out to ensure that the project meets specifications.✓✓ (1 × 2) (2)

3.3 Once all the planning has been completed and meets approval, the project must be executed (put into action/actioned).✓✓ (1 × 2) (2)

3.4 A flow chart shows the sequence of events as they are to be carried out/executed.✓✓

Whereas

The time chart also has the sequence of events with time allocation.✓✓
(2 × 2) (4)

3.5

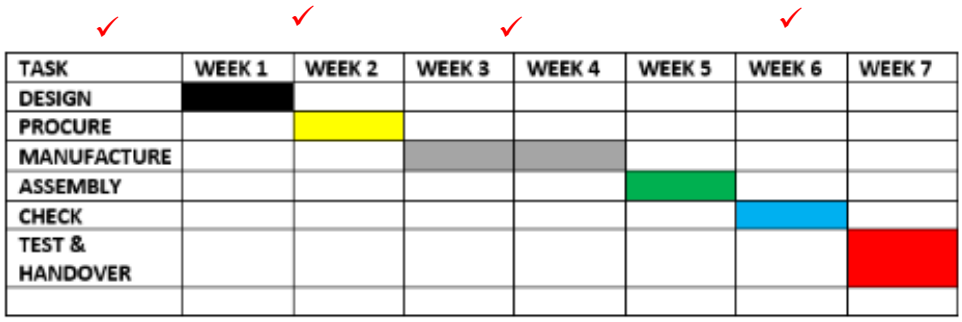

NOTE: 3 MARKS ALLOCATED FOR THE 7 WEEKS

(11 × 1) (11)

3.6 *Integrate* refers to the fact that various sub-systems can be put together to work together.✓✓

Whereas

Interface refers to integrated sub-systems using different protocols that can communicate with each other using software/hardware interface modules.✓✓
(2 × 2) (4)

3.7

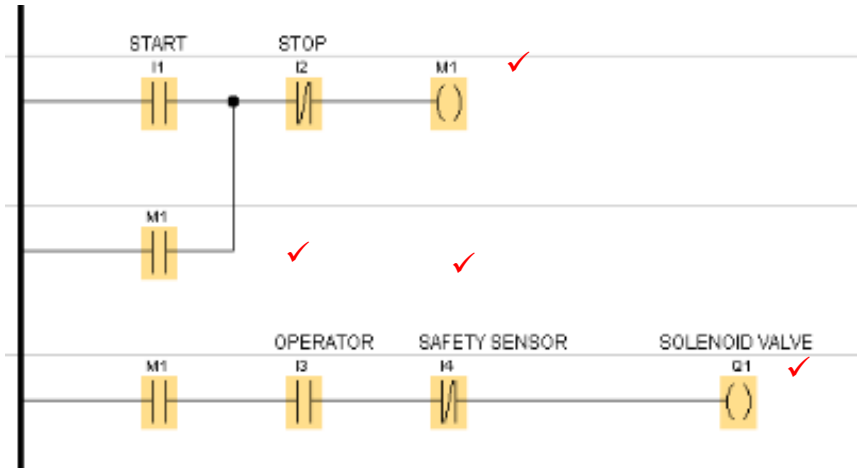

OR

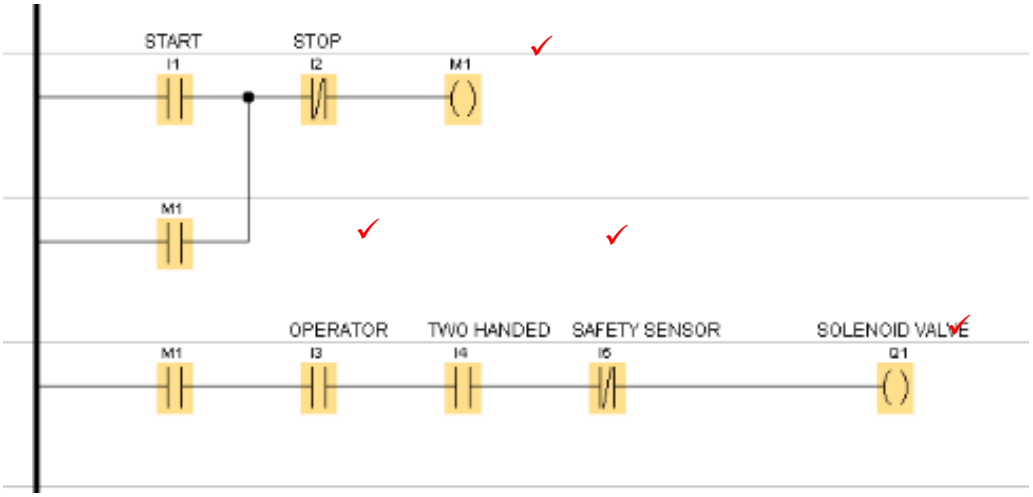

(4 × 1) (4)
[30]

QUESTION 4

4.1 Electrical services ✓
Air service ✓
Sensors ✓ (3 × 1) (3)

4.2
- Status of the system
- Detect the workpiece
- Safety sensor
- Two-handed start

(Any correct TWO) (2)

4.3

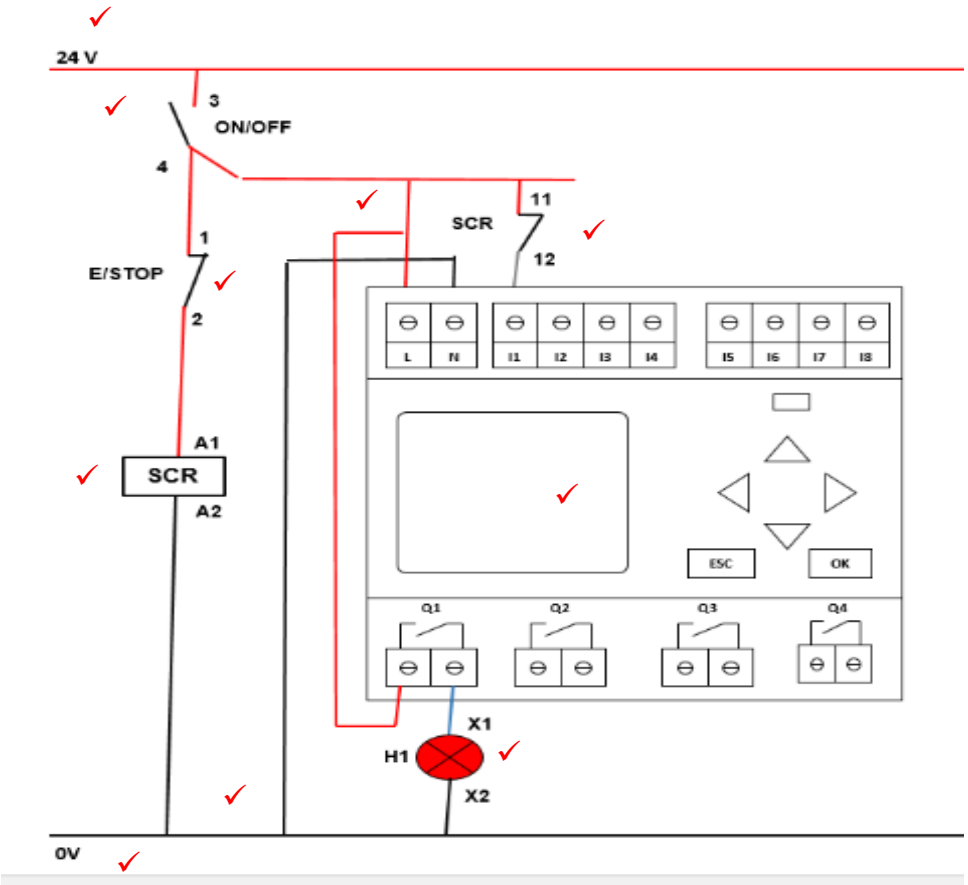

(10 × 1) (10)
[15]

QUESTION 5

5.1
- The engineering drawings
- The electro-pneumatic connection diagram
- The PLC connection/wiring diagram
- The hard copy of the PLC source code
- The soft copy of the PLC source code
- The I/O address allocation
- The servicing/maintenance instructions
- The operating instructions

Any relevant SIX correct✓✓✓✓✓✓ (6 × 1) (6)

5.2 The technical manual is to assist the maintenance person to understand, troubleshoot and repair the mechatronic application.✓✓ (1 × 2) (2)

5.3 *Fatigue* is when a material loses its toughness due to age.✓✓

Wear is when the material loses its tolerance due friction over time.✓✓

(2 × 2) (4)

5.4
- E/Stop✓✓
- Sensor for hand safety✓✓
- Safety control voltage (24V)✓✓
- Low air pressure (8 bar)✓✓

(4 × 2) (8)

[20]

TOTAL: 100

Copyright reserved