higher education & training

Department:
Higher Education and Training
REPUBLIC OF SOUTH AFRICA

MARKING GUIDELINE

NATIONAL CERTIFICATE (VOCATIONAL)

MECHATRONIC SYSTEMS
NQF LEVEL 3

21 November 2024

This marking guideline consists of 6 pages.

Copyright reserved

QUESTION 1

1.1
- Astable multivibrator✓
- Monostable multivibrator✓
- Bistable multivibrator✓ (3 × 1) (3)

1.2 To eliminate noise signal. Any noise entering can be safely by passed through the low impedance capacitive path thus generated.✓✓ (2)

OR

They store and release electrical energy, creating the charging and discharging cycles that drive the multivibrator's oscillations.✓✓

1.3

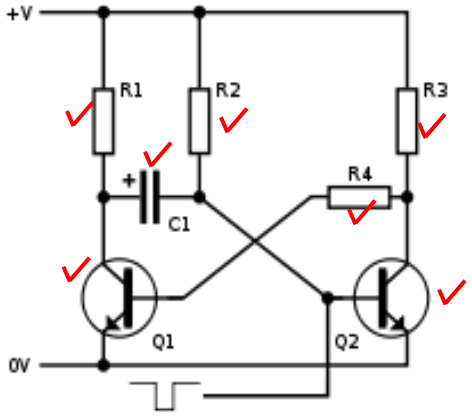

(1 × 7) (7)

1.4
- The resistor restricts the flow of the current.✓✓
- The capacitor stores an electric charge.✓✓
- Diodes allow the current to flow in one direction.✓✓
- Transistors control the current flow.✓✓ (4 × 2) (8)

1.5
- Thyristor switch off when the biasing conditions no longer exist.
- If the current flow is below the holding current value.
- The thyristor is reverse biased

Any TWO of the above✓✓ (2 × 1) (2)
[22]

QUESTION 2

2.1.1 Electric drive converts electrical energy✓ from the power supply system or from a battery into a mechanical energy✓ and transmits✓ the resulting force into motion.✓ (Marker to use discretion) (4 × 1) (4)

2.1.2
- The electric drive can be remote controlled.
- They are free from pollution.
- Available in wide range of torque, speed and power.
- The drive can be easily be started and it does not require any refueling.
- Compact in size.
- Their working is independent of the environmental condition.
- The efficiency of the drive is high because fewer losses occur on it.

Any relevant FIVE✓✓✓✓✓ (5 × 1) (5)

2.1.3
- Transportation systems
- Rolling mills
- Paper machines
- Textile mills
- Machine tools
- Fans
- Pumps
- Robots
- Washing machines

Any relevant FOUR✓✓✓✓ (4 × 1) (4)

2.2 Electric motors are responsible for generating motion and power in a wide range of applications, from electric vehicles to industrial machinery.✓✓

Whereas

An electric drive, often referred to as a motor drive or a variable frequency drive (VFD), is an electronic device that controls the speed, torque, and direction of a motor.✓✓

(2 × 2) (4)

2.3 Servo motors are more efficient than stepper motors with efficiencies between 80%-90%.✓ In overall performance servo motors are best for high speed,✓ high torque applications.✓ (1 × 3) (3)

[20]

QUESTION 3

3.1 They are designed to create backpressure at the return line of the actuator to prevent losing control over the load.✓✓ (2)

OR

The counter balance value is used to maintain back pressure on a vertical cylinder to prevent it falling due to gravity.✓✓

3.2
- Purpose✓
- Stroke requirement✓
- Thrust✓
- Speed✓
- Acceleration and deceleration✓
- Cylinder mountings✓
- Special seal requirement✓ Any relevant answer (7 × 1) (7)

3.3
- Ensure that all sources of energy are turned off (hydraulic and electrical)
- Ensure that all components are securely fitted
- Connect all connecting piping securely
- Connect all electrical connecting wires securely
- Switch electrical power on before hydraulic power
- Commission the control circuit Any correct FIVE✓✓✓✓✓ (5 × 1) (5)

3.4 An open circuit directs flow from the pump, to the actuator and from the actuator to the reservoir. The pump then draws from the reservoir.✓✓

Whereas

A closed circuit directs flow from the pump, to the actuator, then from the actuator back to the inlet of the pump, without entering a reservoir.✓✓

(2 × 2) (4)

[18]

QUESTION 4

4.1 4.1.1 This is when a system is started manually and stopped automatically. (2)

4.1.2 Open loop control or discontinuous control. (1)

4.1.3
- Manual control
- Automatic control
- Open-loop control
- Proportional control
- Closed loop control (Any 3 × 1) (3)

4.2 Pressure relief valves are a type of safety valve that are commonly used to protect a system and the people operating it.✓✓✓

Whereas

Pressure regulator take incoming line pressure and regulates it down to the pressure that is required by the downstream system.✓✓✓

(2 × 3) (6)

4.3 When a start pushbutton (S1) is pressed✓ relay K1 is energised✓ and the NO contact of relay K1 keeps the relay energised.✓ The NO contact of K1 now closed energises 1M1✓ and timer T1. The cylinder will extend.✓ The NO contact of T1 after 5 seconds closes and energises relay K2✓ and the NO contact K2 now closed must energise 1M2. ✓ The cylinder will then retract slowly.✓ (8)

(1 × 8) **[20]**

QUESTION 5

5.1 5.1.1
- Fault detection details
- diagnostic findings
- time and date of fault

(Any 2 × 1) (2)

5.1.2
- what was repaired
- by who was it repaired
- spares used
- mean time to repair
- mean time between breakdowns

(Any 2 × 1) (2)

5.1.3
- wear check
- date of oil change
- time since last oil change
- by who was the oil changed

(Any 2 × 1) (2)

5.1.4
- suction strainers cleaned
- high pressure filters replaced
- date of filter replaced
- time since last filter replaced
- by who was the filter replaced

(Any 2 × 1) (2)

Copyright reserved

5.2

Appearance	Contaminants	Possible causes
Dark in colour✓	Product of oxidation✓	Overheating, insufficient fluid changes, possible ingress of other fluid✓
Milkiness✓	Water or foam✓	Ingress of water or air
Water separation✓	Water ✓	Ingress of water, e.g coolant ✓
Air bubbles✓	Air ✓	Ingress of air, e.g due to low fluid level or leaky suction✓
Floating or sunken contaminants✓	Solids✓	Wear, dirt, aging✓
Smell of burnt oil	Product of aging✓	Overheating ✓

(Any 4 × 3) (12)
[20]

TOTAL: 100

Copyright reserved