higher education & training

Department:
Higher Education and Training
REPUBLIC OF SOUTH AFRICA

MARKING GUIDELINE

NATIONAL CERTIFICATE (VOCATIONAL)

MECHANICANICAL DRAUGHTING AND TECHNOLOGY
NQF LEVEL 4
(Second paper)

2 December 2024

This marking guideline consists of 13 pages.

Copyright reserved

QUESTION 1: SCREW THREADS AND SPRINGS

1.1 HELICAL SQUARE THREAD (Conventional representation)

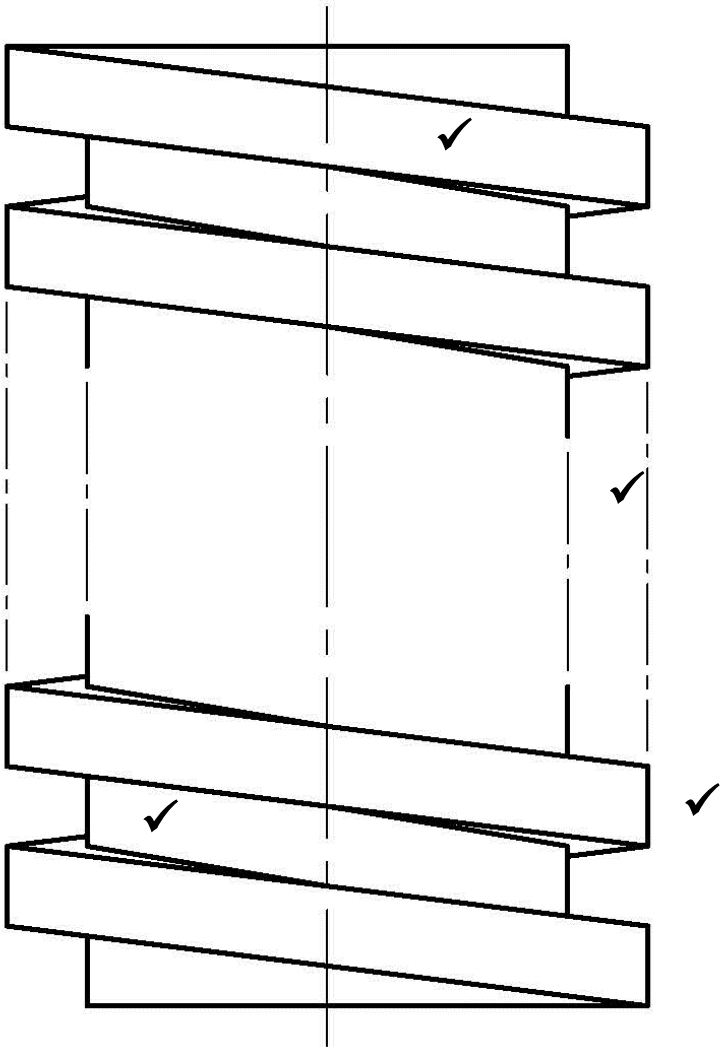

DESCRIPTION	MARK DISTRIBUTION
Correctness	4
Linework	2
Accuracy	2
Direction	1
Position	1
TOTAL	**10**

(10)

1.2 HELICAL SPRING (Left-Hand)

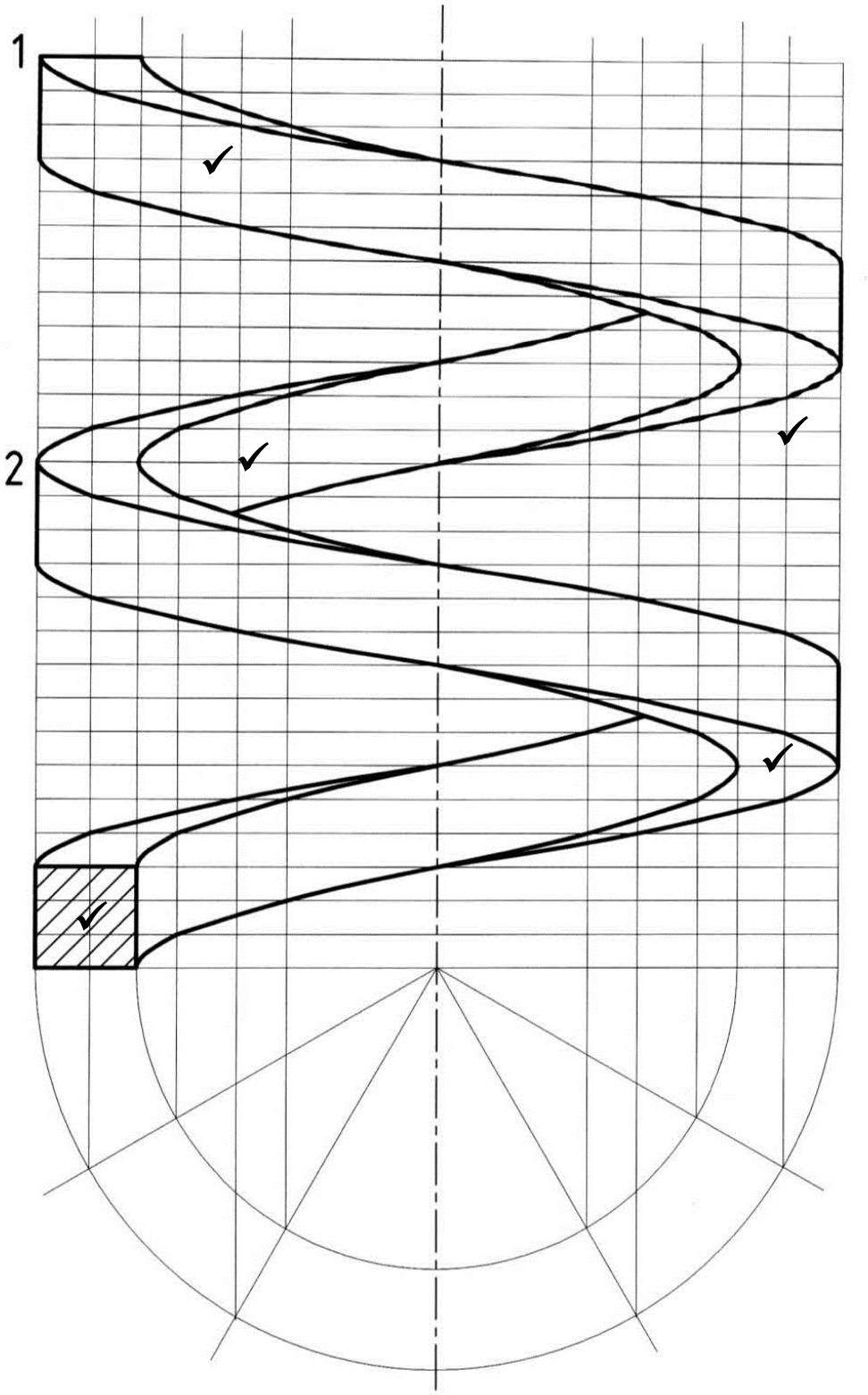

QUESTION 1.2 Mark Distribution

DESCRIPTION	MARK DISTRIBUTION
Correctness	5
Linework	2
Accuracy	2
Direction	1
TOTAL	**10**

(10)
[20]

QUESTION 2: GEARS AND KEYS

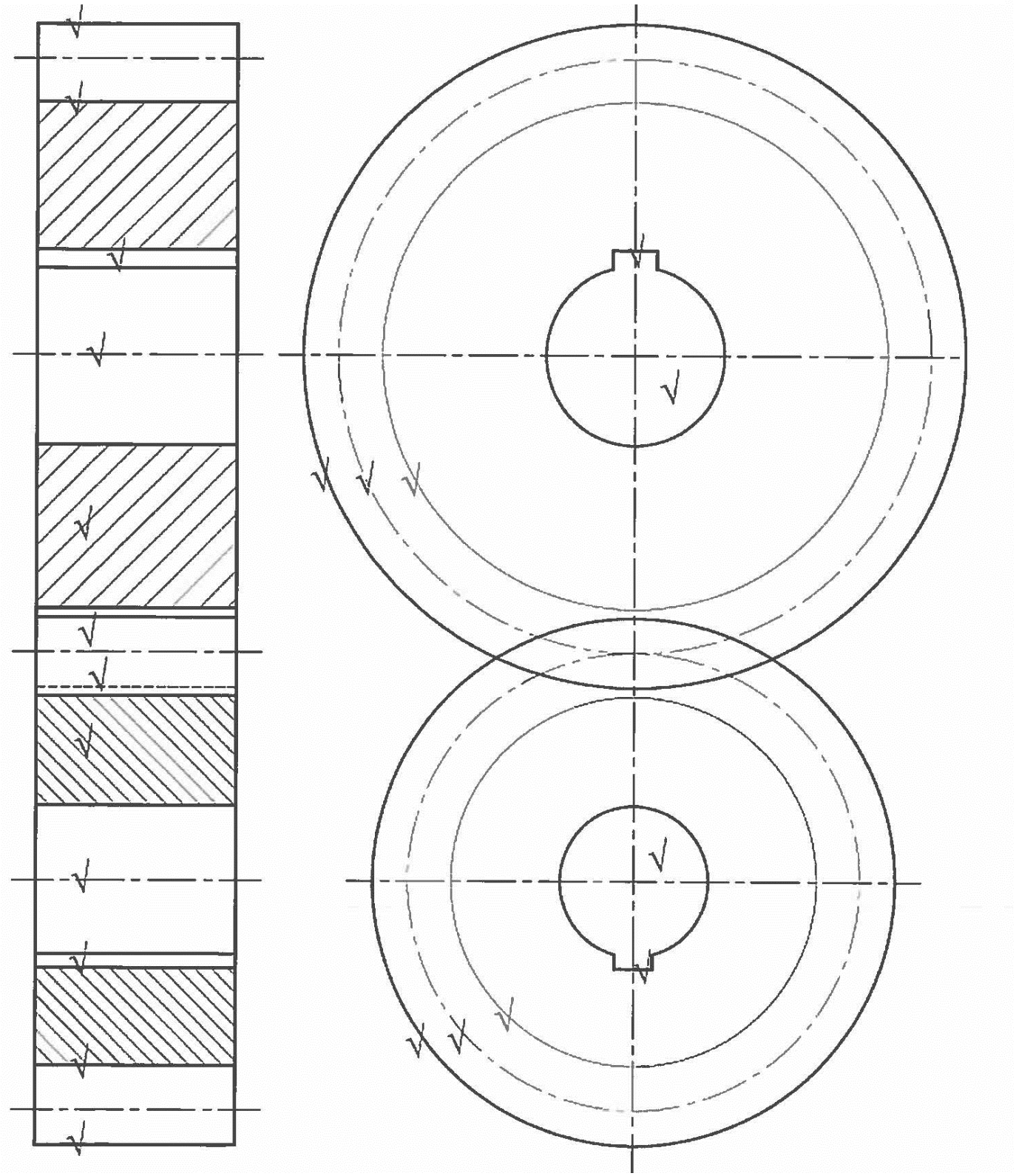

QUESTION 2: MARK DISTRIBUTION

Full-Sectional Front View

DESCRIPTION	MARK DISTRIBUTION
Full-sectional front view	
Correctness (12 x 0,5 = 6 Marks)	6
Linework	1
Accuracy	1
TOTAL	**8**

Left View

DESCRIPTION	MARK DISTRIBUTION
Left view showing the keyway detail of the hole (10 x 0,5 = 5 Marks)	
Correctness	5
Linework	1
Accuracy	1
TOTAL	**7**

[15]

QUESTION 3: CAMS

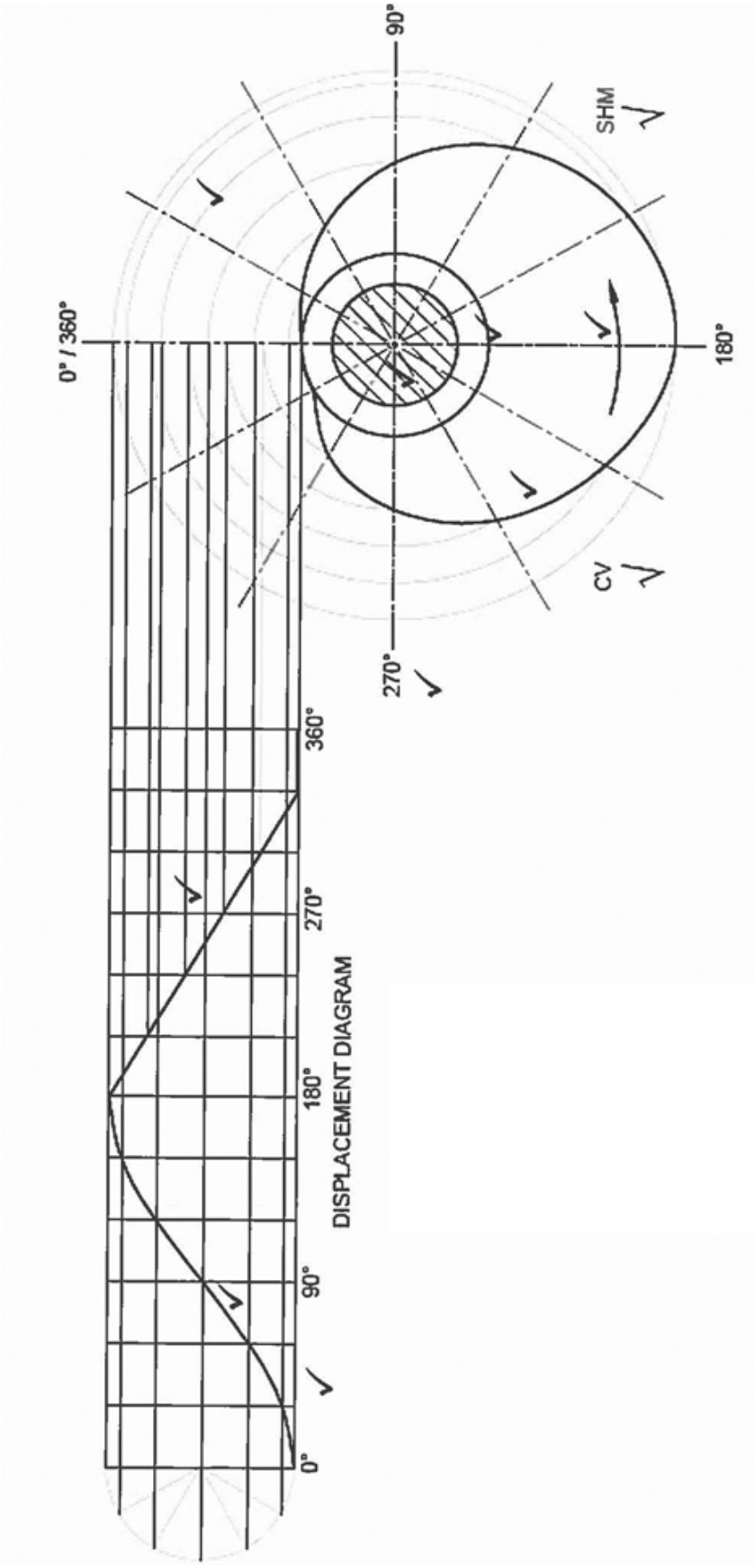

QUESTION 3: Mark Distribution

DESCRIPTION	MARK DISTRIBUTION
Displacement Diagram	3
Cam Profile	6
Linework	2
Accuracy	2
Shaft Hatch Detail	1
Direction	1
TOTAL	**15**

[15]

QUESTION 4: ASSEMBLY DRAWING

1

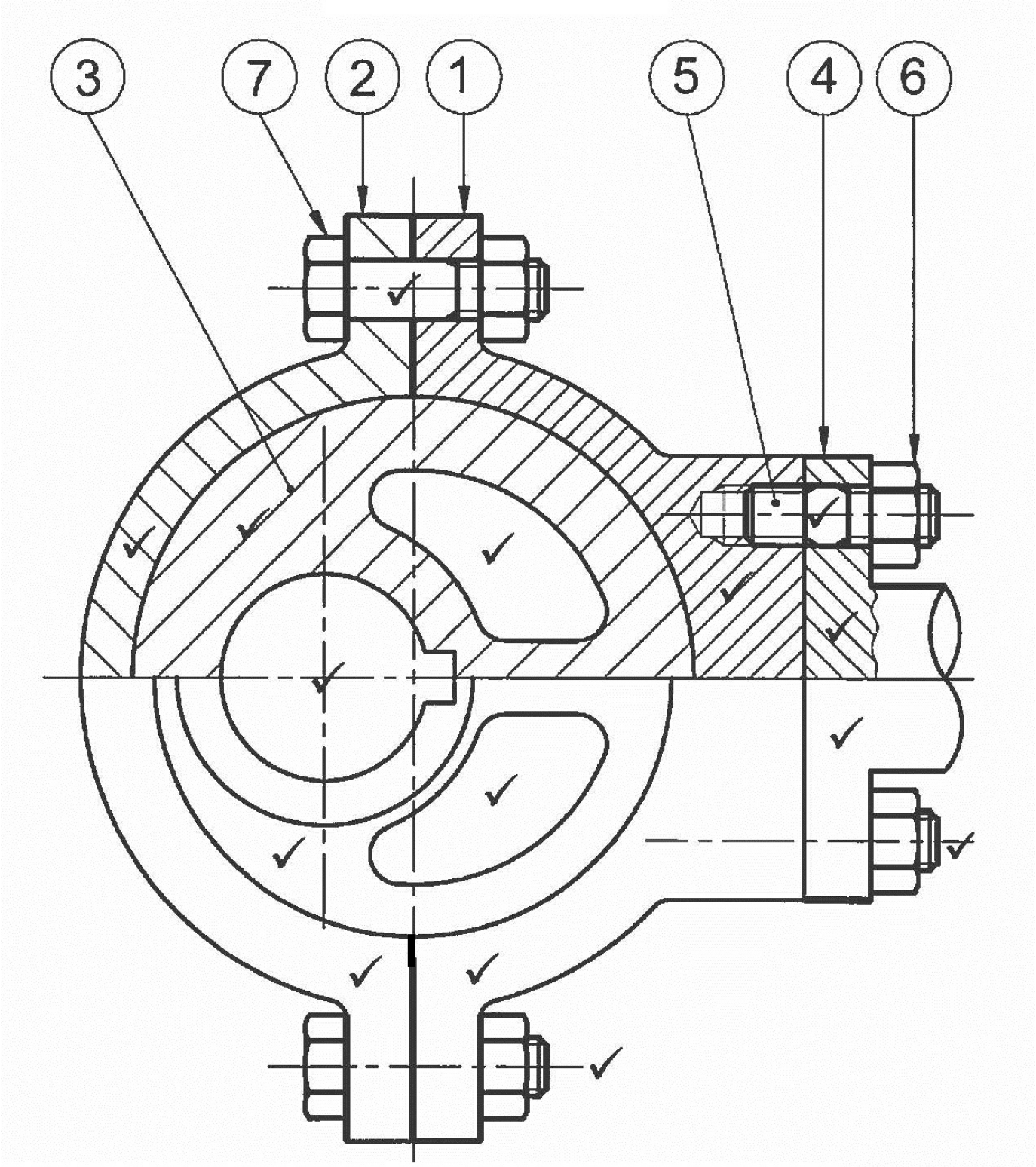

QUESTION 4: Mark Distribution

DESCRIPTION	MARK DISTRIBUTION
Correctness (Items arranged in the correct position)	15
Neatness, Hatching and Linework	5
Accuracy	4
Item Numbers	6
TOTAL	**30**

[30]

QUESTION 5: DETAIL DRAWING

5.1 Turning Wheel (Item 2)

DESCRIPTION	MARK DISTRIBUTION
5.1.2 Left view	
Correctness	4
Neatness, Hatching and Linework	1
Accuracy	1
TOTAL	**6**

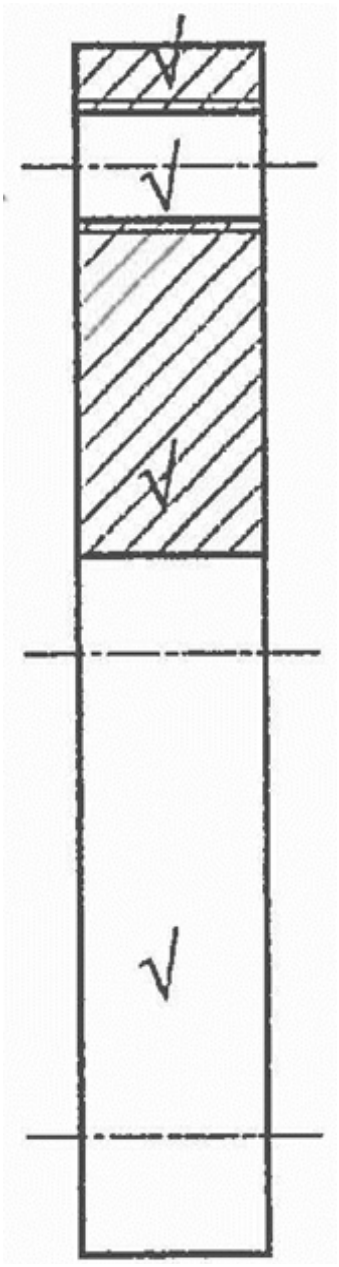

5.2 **The Wheel – Item 3** (6)

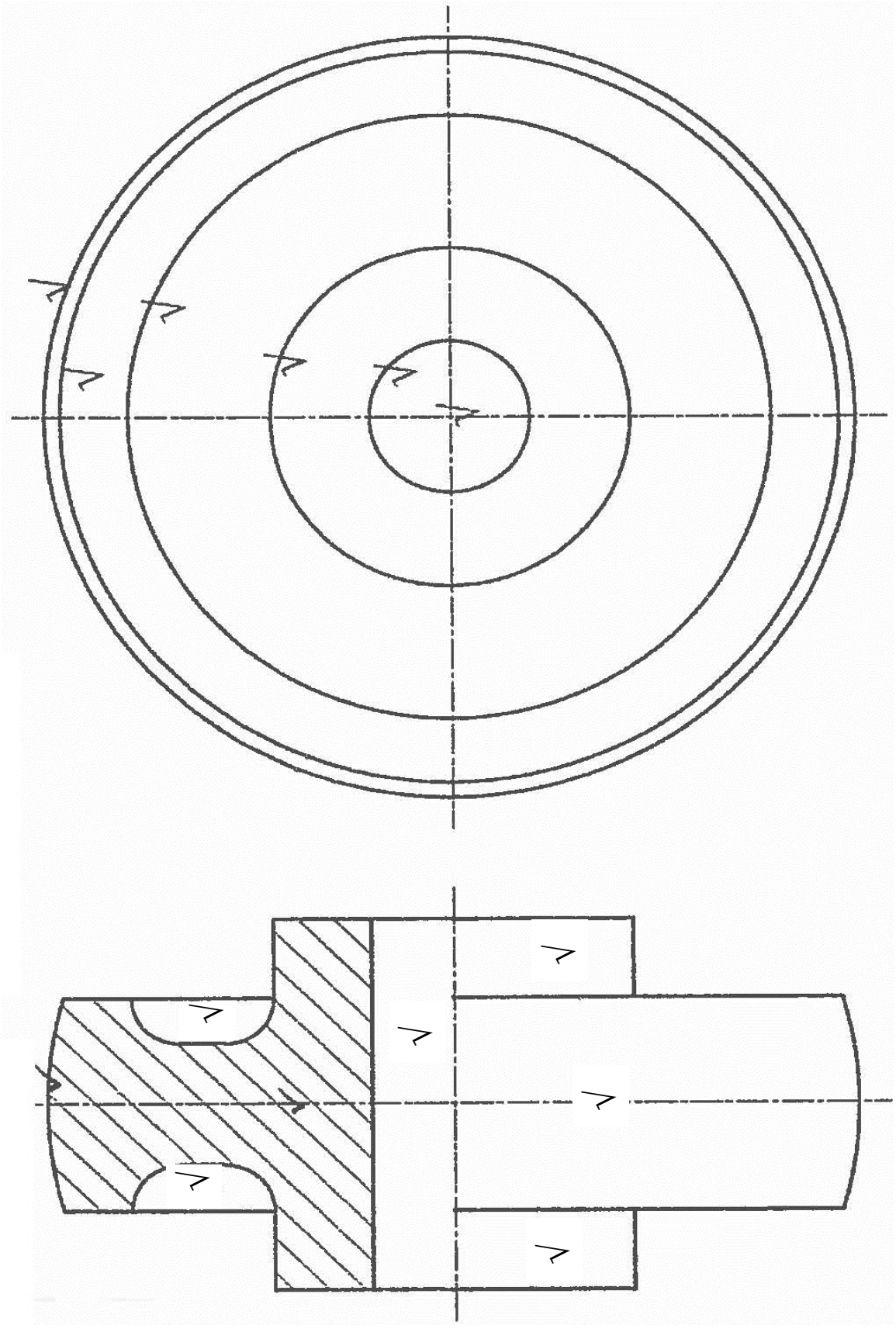

QUESTION 5.2 Mark Distribution

DESCRIPTION	MARK DISTRIBUTION
5.2.1 Half-sectional front view with the top half in section.	
Correctness	5
Neatness, Hatching and Linework	2
Accuracy	2
TOTAL	**9**

(9)

DESCRIPTION	MARK DISTRIBUTION
5.2.2 Left View	
Correctness	3
Neatness, Hatching and Linework	1
Accuracy	1
TOTAL	**5**

(5)
[20]

TOTAL: 100

Copyright reserved