higher education & training

Department:
Higher Education and Training
REPUBLIC OF SOUTH AFRICA

MARKING GUIDELINE

NATIONAL CERTIFICATE (VOCATIONAL)

MATHEMATICS
NQF LEVEL 3
(First paper)

4 November 2024

This marking guideline consists of 9 pages.

Copyright reserved

INSTRUCTIONS AND INFORMATION

1. This marking guideline consists of 9 pages.

2. Where a calculation or copying error takes place: penalise with one mark if the difficulty of the question remains intact. If the question is easier to solve, no marks are allocated.

3. When a second error in the same answer occurs, stop marking.

4. Where a principle (basic rule) error occurs, do not allocate any more marks for that question.

5. Mathematically correct alternative answers may be marked.

6. Answers in pencil are not marked.

7. Where a question is attempted twice and neither of the answers cancelled, mark the first attempt only.

8. Be vigilant in the transfer of marks from the ANSWER SHEETS to the total of the relevant questions.

9. Some learners may draw the graphs twice, in the ANSWER BOOK as well as on the ANSWER SHEETS. Be vigilant not to allocate marks twice.

10. ✓ = one mark
√ = half mark

11. Mark all the questions.

12. Read all the answers carefully.

13. Follow the answers according to the numbering system used in the question paper.

14. Use only a red pen.

15. Clearly and neatly write the marks and make the ticks and crosses.

Copyright reserved

QUESTION 1

1.1 1.1.1

$z = 2(3-4j)^2$
$z = 2(9-24j+16j^2)$
$z = 2(-7-24j)$
$z = -14-48j$

✓bracket
✓simplify last term
✓real value
✓imaginary value (4)

1.1.2

$z = \frac{-3+j}{5+3j}$

$z = \frac{-3+j}{5+3j} \times \frac{5-3j}{5-3j}$ ✓conjugate

$z = \frac{-15+14j-3j^2}{25-9j^2}$ ✓numerator ✓denominator

$z = \frac{-12+14j}{34}$ ✓answer – separate

$z = \frac{-6}{17} + \frac{7}{17}j$ (4)

1.2 1.2.1 Calculate z_4 *if* $z_4 = \frac{(z_1)(z_2)}{z_3}$. Give the answer in rectangular form.

$z_4 = \frac{(12{,}4cis\ 45^0)(cis\ 75^0)}{-2cis\ 30^0}$ ✓numerator

$z_4 = \frac{12{,}4cis\ 120^0}{-2cis\ 30^0}$ ✓modulus ✓argument

$z_4 = -6{,}2cis\ 90^0$ ✓standard form

$z_4 = 0 - 6{,}2\,j \quad or \quad z_4 = -6{,}2\,j$ (4)

1.3.1

$r^2 = (-3)^2 + (-1{,}5)^2$
$r^2 = 11{,}25$
$r = 3{,}354$

✓ r value.

$\theta = 180° + tan^{-1}(0{,}5)$
$\theta = 180° + 26{,}565°$
$\theta = 206{,}565°$

✓ Reference angle

✓ angle (3)

QUESTION 2

2.1 2.1.1

$z_1 = -12 + 4j$

$r = \sqrt{(-12)^2 + (4)^2}$

$r = \sqrt{160} = 4\sqrt{10}$ ✓modulus

$\theta = 180° - tan^{-1}(\frac{4}{12})$ ✓acute angle

$\theta = 180° - 18{,}4349°$

$\theta = 161{,}57°$ ✓obtuse angle

$z_1 = \ 4\sqrt{10}\ cis\ 161{,}57°$ ✓polar form (4)

2.1.2

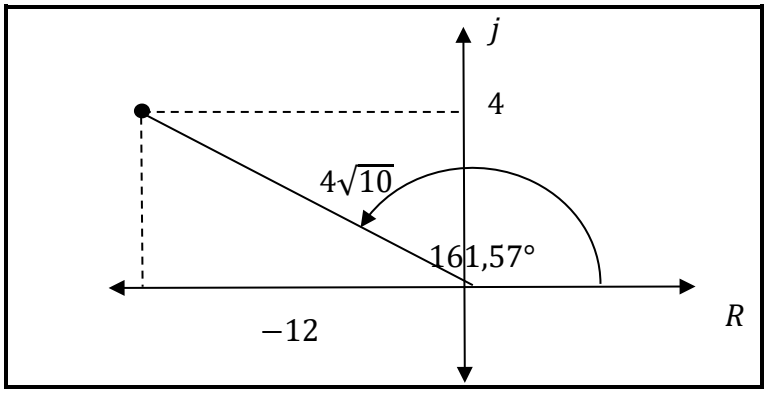

✓standard form
✓modulus
✓argument

(3)

2.2

$LHS = \frac{3}{2\sqrt{2}i}$

$= \frac{3}{2\sqrt{2}i} \times \frac{-2\sqrt{2}i}{-2\sqrt{2}i}$

$= \frac{-6\sqrt{2}i}{-8i^2}$

$= \frac{-6\sqrt{2}i}{8}$

$= \frac{-3\sqrt{2}i}{4} = RHS$

✓ Simplify to imaginary number
✓ Conjugate
✓ Simplify to the RHS − must show steps

OR

$LHS = \frac{3}{2\sqrt{2}i}$

$= \frac{3}{2\sqrt{2}i} \times \frac{-\sqrt{2}i}{-\sqrt{2}i}$

$= \frac{-3\sqrt{2}i}{-4i^2}$

$= \frac{-3\sqrt{2}i}{4}$

✓ Simplify to imaginary number
✓ Conjugate
✓ Simplify to the RHS − must show steps

(3)

2.3 $3 - 6j^5 + 4j^{10}$
$= 3 - 6j(j^2)^2 + 4(j^2)^5$
$= 3 - 6j(-1)^2 + 4(-1)^5$
$= 3 - 6j - 4$
$= -1 - 6j$

✓simplify j^5
✓simplify j^{10}
✓substitute $j^2 = -1$
✓real part
✓imaginary part (5)
[15]

QUESTION 3

3.1 3.1.1 $p = 2$
$q = -1$

✓answer
✓answer
(2)

3.1.2 $y = \frac{a}{x-2} - 1$
$0 = \frac{a}{0,5-2} - 1$
$a = -\frac{3}{2} \quad OR \quad a = -1,5$

$g(x) = \frac{-\frac{3}{2}}{x-2} - 1$

✓substitute coordinate
✓value
✓equation
(3)

3.1.3 $y = \frac{-\frac{3}{2}}{-2} - 1 = -\frac{1}{4} = -0,25$

✓value of y
*do not penalise if not in coordinate form
(1)

3.2 3.2.1 $f: 8 = -x - 3 \quad \therefore x = -11$
$Domain: x \in (-11; \infty) \quad OR \quad x > -11; \quad x\varepsilon R$

✓substitute value of y
✓Value of x
✓Domain (3)

3.2.2 $g(x) = -x^2 + 2x + 15$
$x = -\frac{b}{2a}$

$x = -\frac{2}{2(-1)} = 1$

$g(1) = -(1)^2 + 2(1) + 15 = 16$

$C = (1; 16)$

✓ $x = -\frac{b}{2a}$
✓ $x = 1$
✓ $g(1) = 16$
✓coordinate of C
(4)

3.2.3 $f(x) \leq g(x)$
$x\epsilon[-3; 6] \quad OR \quad -3 \leq x \leq 6$

✓values and inequality signs (1)

3.3 Given: The equation of $f(x) = 3.3^x - 1$

3.3.1 $x - and\ y - intercepts\ of\ f(x)$

$x - intercept$: $0 = 3.3^x - 1$

$\frac{1}{3} = 3^x \qquad \therefore 3^{-1} = 3^x$

✓coordinate

$x - intercept$: $(-1; 0)$

$y - intercept$: $y = 3.3^0 - 1 = 2$

$y - intercept$: $(0; 2)$

✓coordinate
*deduct one mark if not in coordinate form (2)

3.3.2 **ANSWER SHEET**

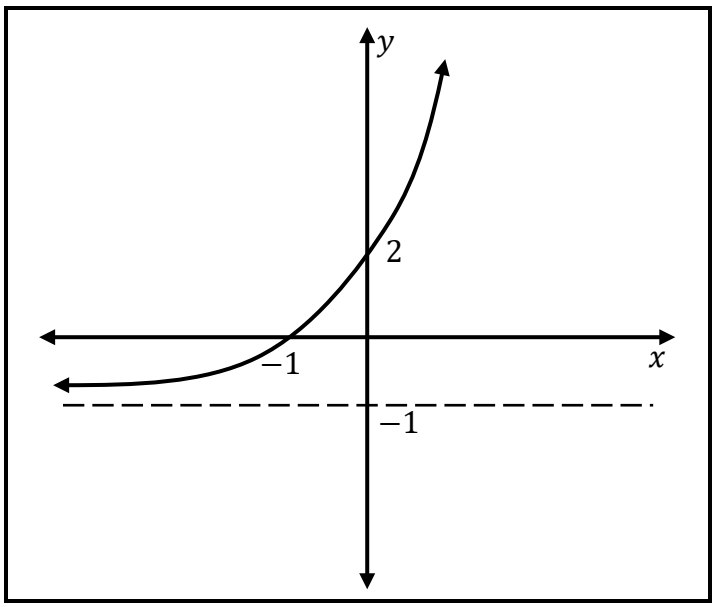

✓shape and asymptote
✓y-intercept
✓x-intercept

(3)

3.3.3 $y = -1$ ✓equation (1)

[20]

QUESTION 4

4.1		$\frac{x^3 - x^2}{x} \div x^2$ $= \frac{x^2(x-1)}{x} \times \frac{1}{x^2}$ $= \frac{(x-1)}{x}$	✓$x^2(x-1)$ ✓$\frac{1}{x^2}$ ✓$\frac{(x-1)}{x}$	(3)

4.2 4.2.1

$$2(x-4) = 5 - \frac{3}{x-2}$$
$$2(x-4)(x-2) = 5(x-2) - 3$$
$$2x^2 - 17x + 29 = 0$$ ✓standard form
$$x = \frac{-(-17) \pm \sqrt{(-17)^2 - 4(2)(29)}}{2(2)}$$ ✓substitution
$$x = \frac{(17) \pm \sqrt{57}}{2(2)}$$ ✓✓ answers
$$x = 6{,}14 \quad of \quad x = 2{,}36$$

*If standard form is incorrect, only follow up with one mark for correct substitution of the formula. (4)

4.2.2 Solve x if $x^2 - 15x - 16 < 0$

$(x-16)(x+1) < 0$ ✓factors

$x = 16 \quad OR \quad x = -1$ ✓values of x

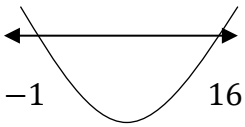

✓inequality signs /round brackets

$Solution$: $x\epsilon(-1;16) \quad OR \quad -1 < x < 16$ ✓correct interval (4)

4.2.3 Solve x if $5x^2 - 8x - 1 = 0$

$$x = \frac{-(-8) \pm \sqrt{(-8)^2 - 4(5)(-1)}}{2(5)}$$ ✓substitution
$$x = \frac{8 \pm \sqrt{84}}{10}$$ ✓simplification
$$x = 1{,}717 \quad OR \quad x = -0{,}117$$ ✓✓ one mark per answer (4)

4.3 $Substitute\ x = 3 - 2y$: ✓correct substitution

$2(3-2y)^2 - 16(3-2y) = 16y - 4y(3-2y)$

$18 - 24y + 8y^2 - 48 + 32y = 16y - 12y + 8y^2$ ✓multiplication of brackets

$4y = 30$ ✓simplification

$y = \frac{15}{2} \ OR \ y = 7{,}5$ ✓answer

$x = -12$ ✓x-value (5)

[20]

QUESTION 5

5.1 5.1.1

$$y = -5x(2x - \frac{3}{x^2})$$
$$y = -10x^2 + 15x^{-1}$$
$$\frac{dy}{dx} = -20x - \frac{15}{x^2}$$

✓multiplication
✓✓each term
*deduct a mark for incorrect notation (3)

5.1.2

$$y = \frac{4x^2 - 4}{(2x - 2)}$$
$$y = \frac{4(x-1)(x+1)}{2(x-1)}$$
$$y = 2x + 2$$
$$\frac{dy}{dx} = 2$$

✓factorise numerator
✓equation
✓derivative both terms (3)

5.2 $h(x) = 1 - 3x^2$

$$h'(x) = \lim_{h \to 0} \frac{1 - 3(x+h)^2 - (1 - 3x^2)}{h}$$
$$h'(x) = \lim_{h \to 0} \frac{1 - 3x^2 - 6xh - 3h^2 - 1 + 3x^2}{h}$$
$$h'(x) = \lim_{h \to 0} \frac{h(-6x - 3h)}{h}$$
$$h'(x) = -6x$$

✓$f(x+h)$ substitution
✓simplification
✓factorise
✓answer (4)

[10]

QUESTION 6

*Only penalise once in this question for incorrect units or lack thereof.

6.1
$$120x - 3x^2 = 0$$
$$x(120 - 3x) = 0$$
$$x = 0 \ OR \ 120 - 3x = 0$$
$$x = 0 \ OR \ x = 40$$

Value of x is 40 cm.

✓derivative
✓ = 0
✓factors
✓$x = 0$
✓$x = 40$
✓$x = 40$ $\boldsymbol{cm}$ (6)

6.2 $h = 60 - (40)$ ✓substitution
$h = 20\ cm$ ✓answer (2)

6.3 $V = 60(40)^2 - (40)^3$ ✓substitution
$V = 32\ 000\ cm^3$ ✓answer (2)
[10]

QUESTION 7

7.1 **ANSWER SHEET**

Graph the constraints on the applicable ANSWER SHEET (attached).

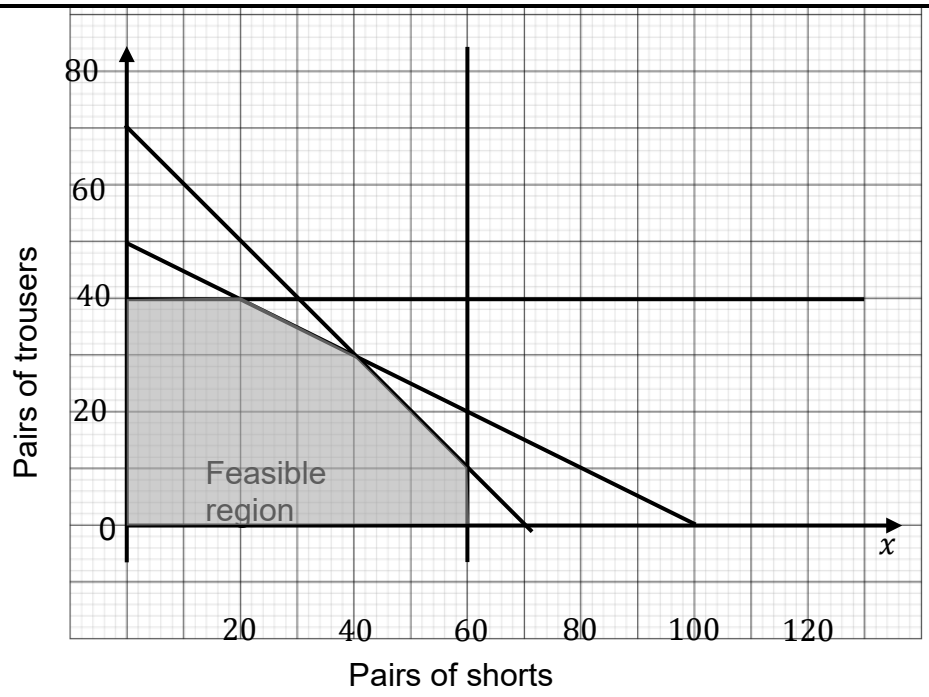

✓
$x \leq 60$

✓
$y \leq 40$

✓
$x + y \leq 70$
Both intercepts

✓
$5x + 10y \leq 500$
Both intercepts

*ONLY continue to 7.2 if at least 3 lines are correct and follow up

(4)

7.2 Shade and indicate the feasible region. ✓✓ (2)

7.3 $P = 15x + 25y$ ✓ (1)

7.4 $(20; 40)$: $P = R1\ 300$
$(40; 30)$: $P = R1\ 350$
$(60; 10)$: $P = R\ 1\ 150$ ✓maximum
$(60; 0)$: $P = R900$ ✓shorts
$Maximum\ profit$: $R1\ 350\ for\ 40\ shorts$ and $30\ trousers$ ✓trousers (3)
[10]

TOTAL: 100

Copyright reserved