higher education & training

Department:
Higher Education and Training
REPUBLIC OF SOUTH AFRICA

MARKING GUIDELINE

NATIONAL CERTIFICATE (VOCATIONAL)

INSTRUMENTATION TECHNOLOGY
NQF LEVEL 3

02 December 2024

This marking guideline consists of 8 pages.

Copyright reserved

QUESTION 1

1.1 1.1.1 It senses and measures a process variable such as temperature, flow, pressure or liquid level✓ and sends out an air pressure signal to the convertor.✓ (2)

1.1.2
- It monitors a process variable needed to achieve the desired results.✓✓
- It is used to protect the equipment and operating staff by ensuring that there is no pressure, temperature, flow or level build-up in the equipment beyond accepted safety levels.✓✓

(2 × 2) (4)

1.1.3
- High cost
- Slow reaction time
- Lower reliability
- Limited range of transmission
- Lower accuracy, especially in long signal lines
- Increased control system requirements
- A pneumatic signal line can be difficult to install (Any 5 × 1) (5)

1.1.4 After a transmitter has been installed in a process, the accuracy of its pressure indication is determined in accordance with the calibration standard✓✓ as laid down by the manufacturer.✓ (3)

1.2
1.2.1 G
1.2.2 D
1.2.3 A
1.2.4 E
1.2.5 B
1.2.6 L
1.2.7 I
1.2.8 H
1.2.9 C
1.2.10 F

(10 × 1) (10)
[24]

Copyright reserved

QUESTION 2

2.1 2.1.1 In 1821 Seebeck discovered that if you join two wires of different materials✓ there will be an EMF generated in the circuit✓ if one junction is heated and the other is kept at a constant temperature.✓

2.1.2 In 1834 Peltier discovered that if two different metal junctions are formed✓ and if current is made to flow over the junctions then heat will be given off ✓if current flows in one direction and absorbed if it flows in the opposite direction. ✓

2.1.3 Thompson – It was first believed that EMF that is present at the junction✓ of a thermocouple alone is an indication of the Peltier effect✓ and therefore the junctions are the only source of EMF in a thermocouple.✓

(3 × 3) (9)

2.2 2.2.1 Neat, labelled diagram of a gas expansion thermometer

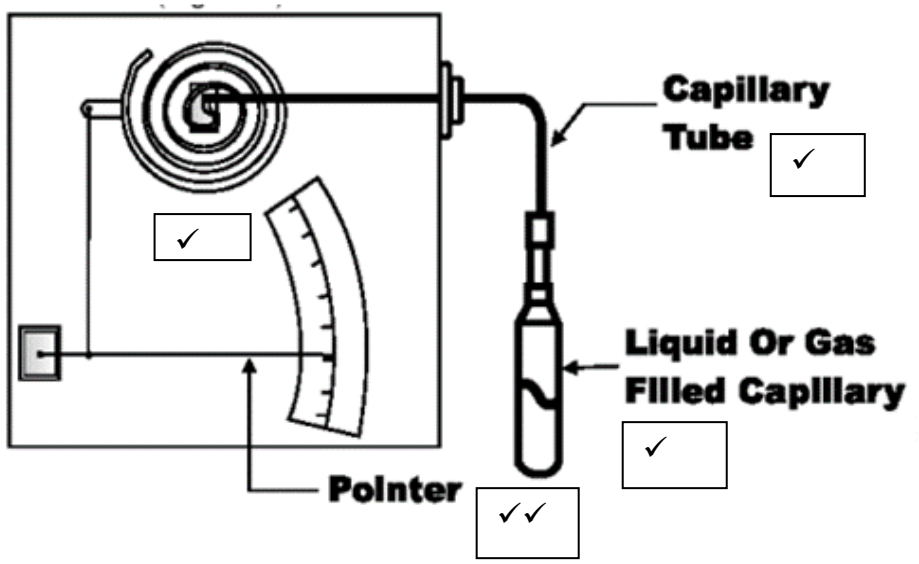

(5)

2.2.2 Charles's Law states that at a constant pressure, the volume of a given mass of gas increases or decreases proportionally✓ as its absolute temperature increases or decreases.✓ (2)

2.2.3 (a) Constant
(b) Increase
(c) Constant
(d) Increase

(4 × 1) (4)

2.2.4
- Start by doing a visual inspection for broken glass, liquid spills or visible damage to the instrument.
- Leave the thermometer at room temperature for about three days before calibration.
- Prepare a reference medium, usually an ice bath.
- Immerse both the test thermometer and the reference thermometer in the ice bath for about five minutes.
- Allow both thermometers to stabilise for a few seconds before taking the reading.
- Compare the test thermometer reading to the reference thermometer reading.
- If the test thermometer gives a different reading to the reference reading you will know that it is not functioning properly and needs to be repaired before use. (Any 6 × 1) (6)

2.3
- If you have dropped it.
- Before you use it for the first time.
- If you use the same thermometer to measure very cold and very hot temperatures.
- Daily or weekly if you use the same thermometer multiple times.

(Any 2 × 1) (2)

2.4
- Prone to self-heating
- Non-linear characteristics
- Prone to moisture failure
- Extremely fragile
- Limited temperature ranges of operation
- Prone to permanent decalibration under high temperatures (Any 5 × 1) (5)

2.5
- Keep thermometers clean.
- Carry thermometers in protective cases.
- Thermometers and cases must be free of dirt.
- Store liquid filled manometers in a bulb down position.
- Store thermometers in a cool place away from direct sunlight. (3)

[36]

QUESTION 3

3.1 3.1.1 Open channel – At least one surface of the flowing fluid is completely open or exposed to pressure.✓✓ They can either be artificial or man-made. (2)

3.1.2 Artificial channel – It include irrigation, drainage and sewer canals. They are usually uniform in shape and may even have constant slope over long distances.✓✓ (2)

3.1.3 Natural channel – have a rough surface and an irregular shape and therefore do not allow accurate analysis.✓✓ (2)

3.2
- The exact incline of a pipe
- The quality and condition of the pipe
- The pipe is not under pressure (3)

3.3 3.3.1 Measuring flow✓✓ (2)

3.3.2
- Steam
- Acids
- Gasses such as air
- Products in the oil industry
- Water
- High viscosity fluids
- Petrochemical products
- Pulp and paper products (Any 4 × 1) (4)

3.3.3
- No moving parts
- Accurate measurements
- Not influenced by impurities in the liquid or gasses
- Not influenced by temperature of the liquid or gas (4)

3.4

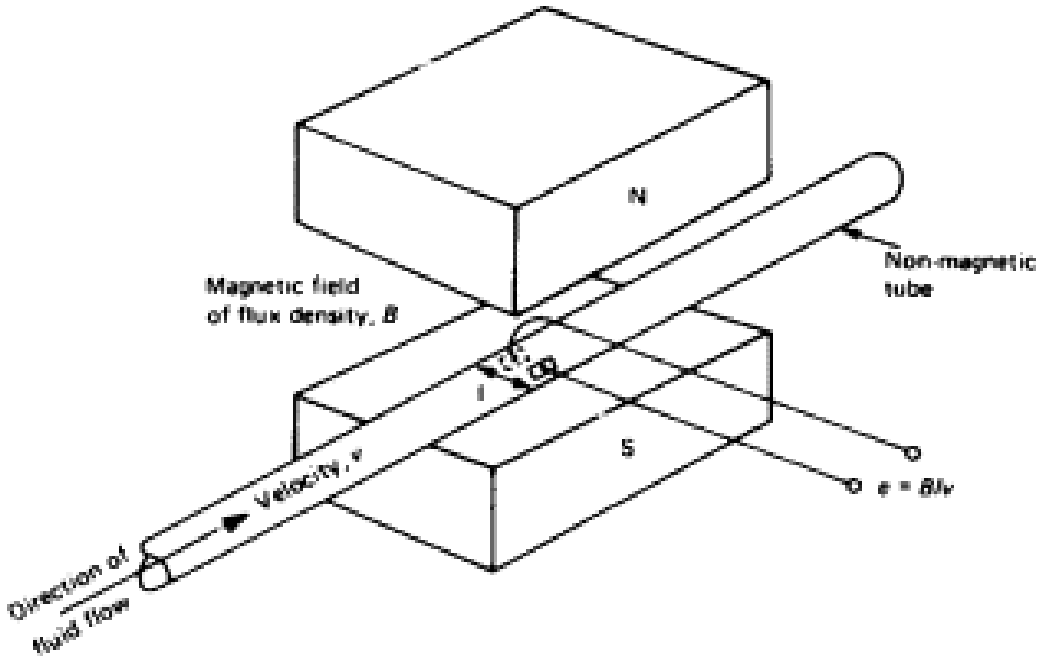

✓✓ For a complete drawing
✓ For each label

Electromagnetic induction is the process of passing a conductor✓ through a magnetic field✓ created by electromagnetic coils in order to produce a voltage.✓ (10)

3.5 3.5.1 C
3.5.2 A
3.5.3 B
3.5.4 A
3.5.5 C
3.5.6 D
3.5.7 B
3.5.8 D
3.5.9 C
3.5.10 A

(10 × 1) (10)

3.6 3.6.1 $Q = 2/3\ b\sqrt{2gH^3}$ ✓
$Q = 2/3 \times 2\sqrt{2} \times 9.8 \times 2.8^3$✓
$Q = 27{,}657\ m^3/s$ ✓ (3)

3.6.2 $Q = 2/3\ b\sqrt{2gH^3}$ ✓
$Q = 2/3 \times 1\sqrt{2} \times 9.8 \times 2.8^3$✓
$Q = 13{,}743\ m^3/s$✓ (3)
[45]

QUESTION 4

4.1 4.1.1 True
4.1.2 True
4.1.3 True
4.1.4 False
4.1.5 True
4.1.6 False
4.1.7 True

(7 × 1) (7)

4.2
- Visual
- Hydrostatic pressure
- Bubbler pressure
- Float type
- Radar
- Ultrasonic
- Conductive
- Capacitive
- Vibration
- Electromechanical

(Any 5 × 1) (5)

4.3 4.3.1 Conductive level measuring instrument

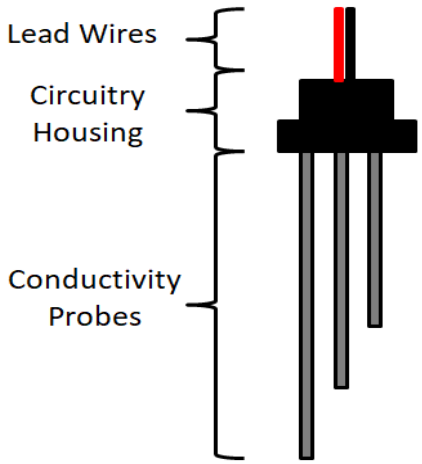

✓✓✓ For complete drawing
✓ For each label

The conductivity of a liquid medium may vary widely. Once the liquid reaches the fill limit determined from the installation height of the electrode,✓ the liquid medium closes the DC free alternating current circuit✓ between the two electrodes✓ (or between the container wall and an electrode). A switching signal is produced from the sudden increase in current consumption.✓✓ (12)

4.3.2 Capacitive level measuring instrument

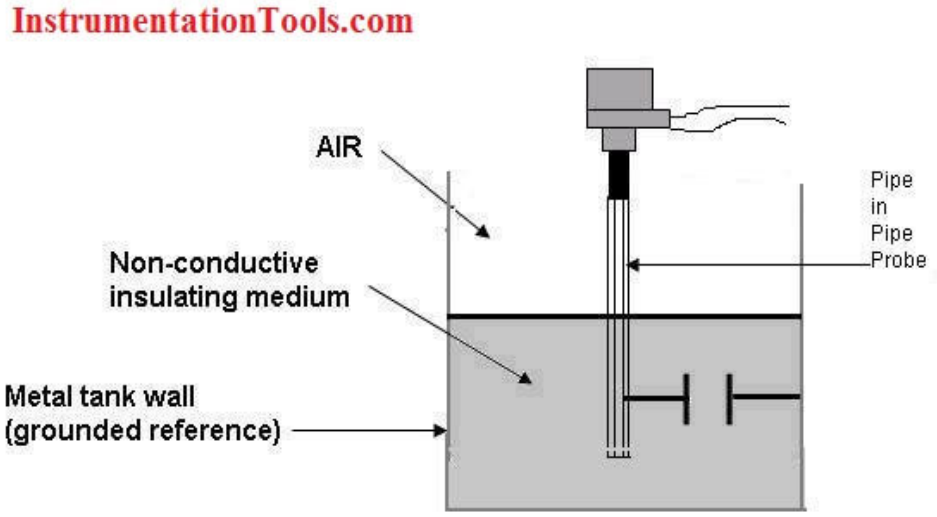

✓✓ For complete drawing
✓ For each label

It works like a capacitor. The tank wall and the electrode are similar to the plates of a capacitor.✓✓The instrument converts the total capacitance into an electrical signal.✓✓The fuller the tank is, the greater the measured capacitance✓ wil be. The electrical signal is used to calculate the level of the tank's content.✓ (12)

4.4 4.4.1 h1 = h3 + h2✓
= 2.2 + 0.6✓
= 2.8 m✓ (3)

4.4.2 Percentage = I_t / L_{max}✓
= 2/4.4 × 100✓
= 45,45%✓ (3)

4.5 The amount the measured variable zero✓ is below the lower range value.✓✓ (3)
[45]

TOTAL: 150

Copyright reserved