higher education & training

Department:
Higher Education and Training
REPUBLIC OF SOUTH AFRICA

MARKING GUIDELINE

NATIONAL CERTIFICATE (VOCATIONAL)

INSTRUMENTATION TECHNOLOGY
NQF LEVEL 3

6 December 2023

This marking guideline consists of 8 pages.

Copyright reserved

QUESTION 1

1.1 1.1.1 True
1.1.2 True
1.1.3 True
1.1.4 True
1.1.5 True

(5 × 1) (5)

1.2
- Relay
- Restrictor
- Permanent magnet
- Nozzle
- Flapper
- Coil
- Coil flexure
- Feedback bellows
- Feedback flexure

(Any 5 × 1) (5)

1.3
- For safety purposes, always close the supply valve upstream of the instrument or open the by-pass valve before you start working on an instrument.
- Make sure you use a transmitter that was designed to work in the pressure range of the system on which you are working.
- The pneumatic transmitter and convertor can easily be installed by simply connecting the transmitter to the pipe where you want the pressure to be measured.
- Place the pneumatic transmitter and convertor on the workplace where you will be able to remove the cover for calibration and maintenance.
- When measuring liquids, the transmitter should be mounted at the same height as the pipe.

(5 × 2) (10)

1.4
- Ensuring that the pneumatic air supply is clean, reliable and dry at all times
- Carrying out a programme of routine and preventative maintenance during which all control components are inspected and, if necessary, adjusted

(2 × 2) (4)

[24]

QUESTION 2

2.1 2.1.1

- No direct contact with the heated body is necessary.
- The measurement is relatively independent of the distance from the heated body.
- The body may be either moving or stationary.
- Low temperature may also be measured, provided that a sufficiently sensitive element is employed to measure the small amounts of radiation.
- Theoretically there is no upper limit of measurement and if the energy radiated from the body is known, its temperature may be derived mathematically. (5)

2.1.2

- It is expensive.
- The temperature readings may be a little inaccurate.
- Specific pyrometers may be used to measure different materials.
- Dust, smoke, fog, steam, etc. will affect the reading.
- A dirty lens will cause an inaccurate reading. (5)

2.1.3

- Rollers or conveyor belts that have moving parts
- Corrosive systems that would destroy contact sensors
- Areas of equipment that are difficult to reach for temperature readings
- Equipment that may not be damaged by installing and removing contact sensors (3)

2.2

- Make sure that the circuit power is switched off.
- Check that the circuit is grounded properly.
- Open the case of the device by unscrewing the correct parts.
- Check that you have a soldering iron and soldering materials.
- Use the correct data sheet.
- Only solder the lowest connection pins of the thermistor to the circuit.
- Make sure that you do not cause any short circuits when you solder.
- Close the case properly and make sure that it is screwed on correctly.
- Place the end of the thermistor that contains the probe in a fixed support in the pipeline to make sure that it does not break.
- Switch on the power and start calibrating. (10)

2.3 2.3.1

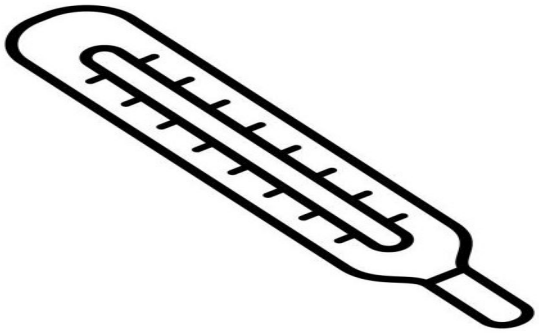

(4)

2.3.2 Most of the liquid in a thermometer is in the bulb.✓ As the temperature of the liquid increases,✓ the liquid will expand✓ and push up into the narrow tube.✓ As the liquid expands, the meniscus of the liquid will move to a certain mark on the scale.✓ You can then read the temperature from where the meniscus is on the scale. (5)

2.4 2.4.1 The curve✓ seen at the top of a liquid in response to its container✓

2.4.2 A displacement or difference in the apparent position✓ of an object when viewed along two different lines of sight✓

(2 × 2) (4)
[36]

QUESTION 3

3.1 3.1.1 G
3.1.2 D
3.1.3 I
3.1.4 A
3.1.5 B
3.1.6 L
3.1.7 E
3.1.8 C
3.1.9 F
3.1.10 H

(10 × 1) (10)

3.2 3.2.1
- To mix fluids or gases in pipes
- To get different fluids in a pipe to the same temperature
- To speed up the turbulence of the contents of the pipe

(3 × 2) (6)

3.2.2 An obstacle is placed in the pipeline where measurement is required.✓ This obstacle causes vortices to form.✓ If the flow increases, the number of vortices that forms also increases.✓ Sensors detect the vortices from which a flow measurement signal can be calculated.✓ The vortex flow meter measures the frequency of vortex shedding downstream from the obstacle.✓ (5)

3.2.3 In order to calibrate the upper end values of the meter, a frequency generator is used to send a signal to the meter.✓✓ The signal will be the same as the pulses received from the paddle when a vortex forms and touches the paddle.✓ To calibrate the fine span, a signal generator is set to the upper range value of the meter.✓✓ (5)

3.2.4
- No display
- Displayed flow rate is zero while there is flow in a pipe
- Flow meter has flow reading while there is no flow in the pipe
- Flow rate reading fluctuates significantly
- Big difference between the flow reading and the process (5)

3.3

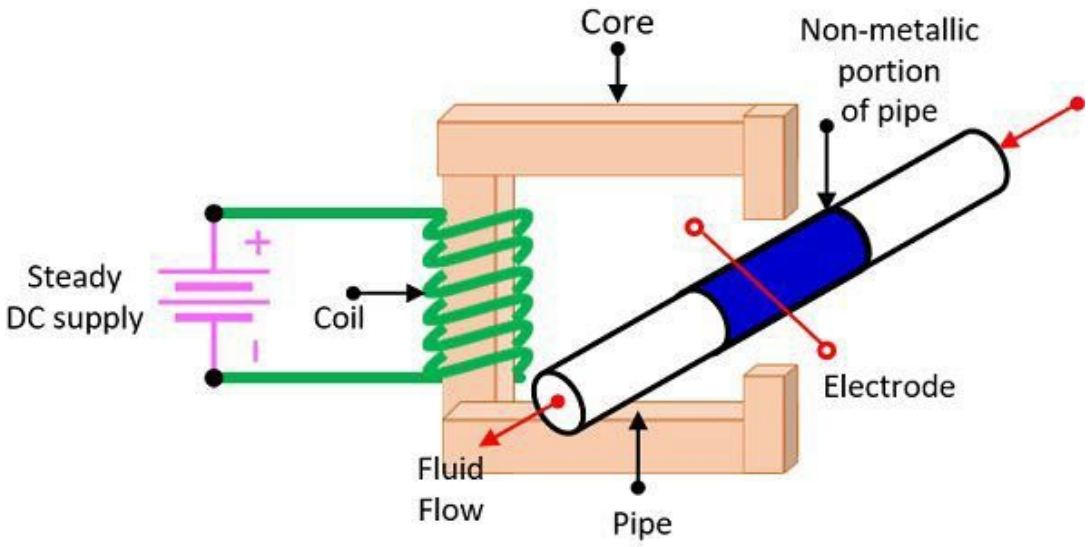

Electromagnetic Flow Meter

ONE mark for showing the meter (output voltage)
ONE mark for showing the fluid flow
ONE mark for showing the electrodes
ONE mark for showing the magnetic coils
FOUR marks for the correct drawing (8)

3.4
3.4.1 Very expensive to construct and install
3.4.2 Universally accepted and available in standard sizes
3.4.3 Uses considerable energy, hence costly
(3 × 1) (3)

3.5
- Rivers
- Drainage
- Oceans
- Ducts and gutters (Any 3 × 1) (3)

[45]

QUESTION 4

4.1 4.1.1 (a) When a measurement can be taken at any time and an exact value can be read

(b) An on/off type of measurement that only checks certain conditions, such as a full or an empty tank

(2 × 2) (4)

4.1.2
- Visually
- Hydrostatic pressure
- Bubbler pressure
- Float type
- Radar
- Ultrasonic
- Conductive
- Capacitive
- Vibration

(Any 5 × 1) (5)

4.2 4.2.1 $H_L = (\frac{\rho_m}{\rho_L} \times h) - h/2$ ✓

$= (13\,600/1\,000 \times 0,5) - 0,5/2$ ✓

$= (13,6 \times 0,5) - 0,25$ ✓

$= 6,8 - 0,25$ ✓

$= \underline{6,55\ m}$ ✓✓ (6)

4.2.2 $H_L = (\frac{\rho_m}{\rho_L} \times h) - h/2$ ✓

$= (13\,600/800 \times 0,25) - 0,25/2$ ✓

$= (17 \times 0,25) - 0,125$ ✓

$= 4,25 - 0,125$ ✓

$= \underline{4,125\ m}$ ✓✓ (6)

Copyright reserved

4.3

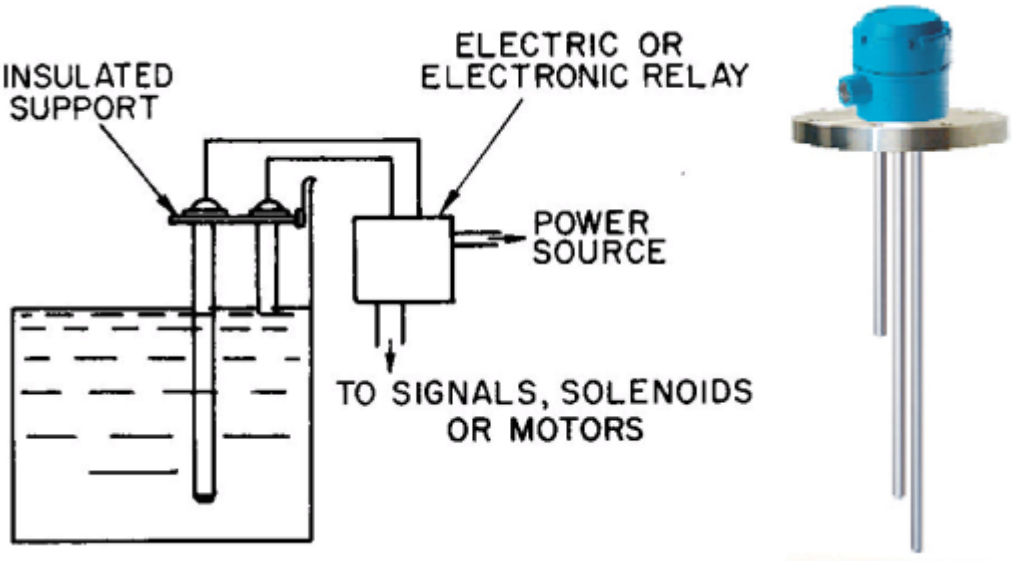

THREE marks for the drawing
THREE marks for labelling

- Check that the probes are the correct length for the tank.
- Mount the sensor in the tank so that the probes do not make contact with the wall of the tank.
- Do not mount the sensor near the point where the liquid is pumped into the tank. This will give an incorrect reading.
- Do not mount the sensor near any other disturbances, as this will give inaccurate readings.
- Do not fasten the sensor by turning the housing.
- Use the correct equipment to fasten the seal of the sensor. (12)

4.4 4.4.1

- When you install the instrument, do not screw it in by turning the housing.
- Seal the thread with Teflon tape before screwing in the switch.
- Use the correct tool to screw in the switch. (3)

4.4.2

- Be aware of the dangers posed by the tank on which you are working. Start mounting the sensor only when it is safe to do so.
- Do not mount the sensor near any other disturbances in the tank, as this will give you an inaccurate reading.
- When you mount the sensor, make sure that only the probe part is inside the tank.
- Do not fasten the sensor by turning the housing.
- If the probe is insulated, make sure you do not damage or scratch the insulation on the device.
- Make sure that the sensor is fastened and sealed by using the correct equipment. (6 × ½) (3)

Copyright reserved

4.4.3
- This meter does not need highly accurate calibration, because it only needs to detect a change in frequency.
- Physically check the vibration probe and extension cable for any damage.
- Check the resistance of the vibration probe and the continuity of extension cable, which should be 5 to 9 Ω and 5 to 20 Ω, respectively. (3)

4.5 4.5.1 Electromechanical
4.5.2 Fluid level
4.5.3 Displacer

(3 × 1) (3)
[42]

TOTAL: 150

Copyright reserved