higher education & training

Department:
Higher Education and Training
REPUBLIC OF SOUTH AFRICA

MARKING GUIDELINE

NATIONAL CERTIFICATE (VOCATIONAL)

ENGINEERING GRAPHICS AND TECHNOLOGY
NQF LEVEL 2

15 November 2024

This marking guideline consists of 6 pages.

Copyright reserved

QUESTION 1

1.1 Print your answer in capital letters, 5 mm high✓✓ (2)

1.1.1 Continuous thick

1.1.2 Continuous thin

1.1.3 Dashed thin

(3 × 1) (3)

[5]

QUESTION 2

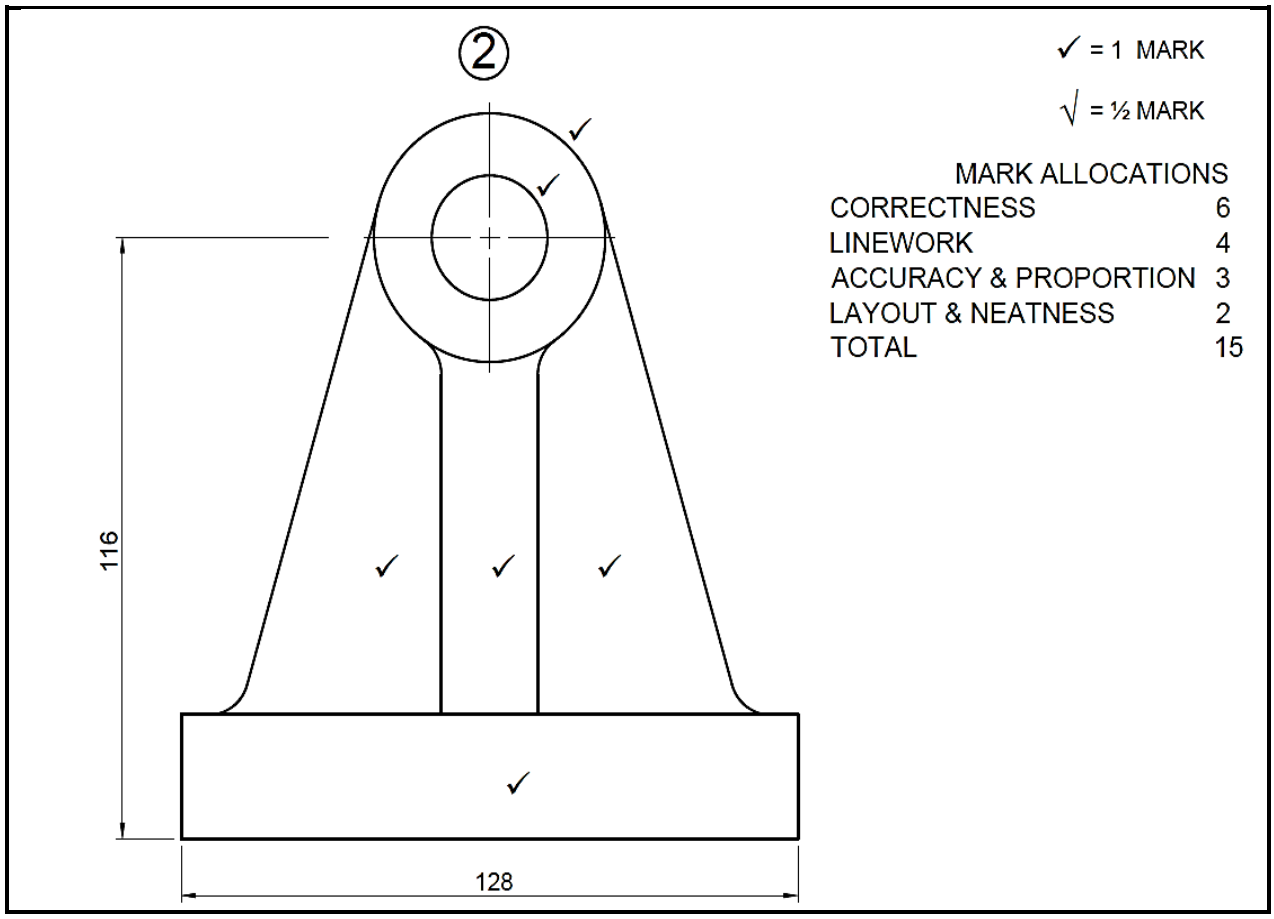

FIGURE 1 **[15]**

QUESTION 3

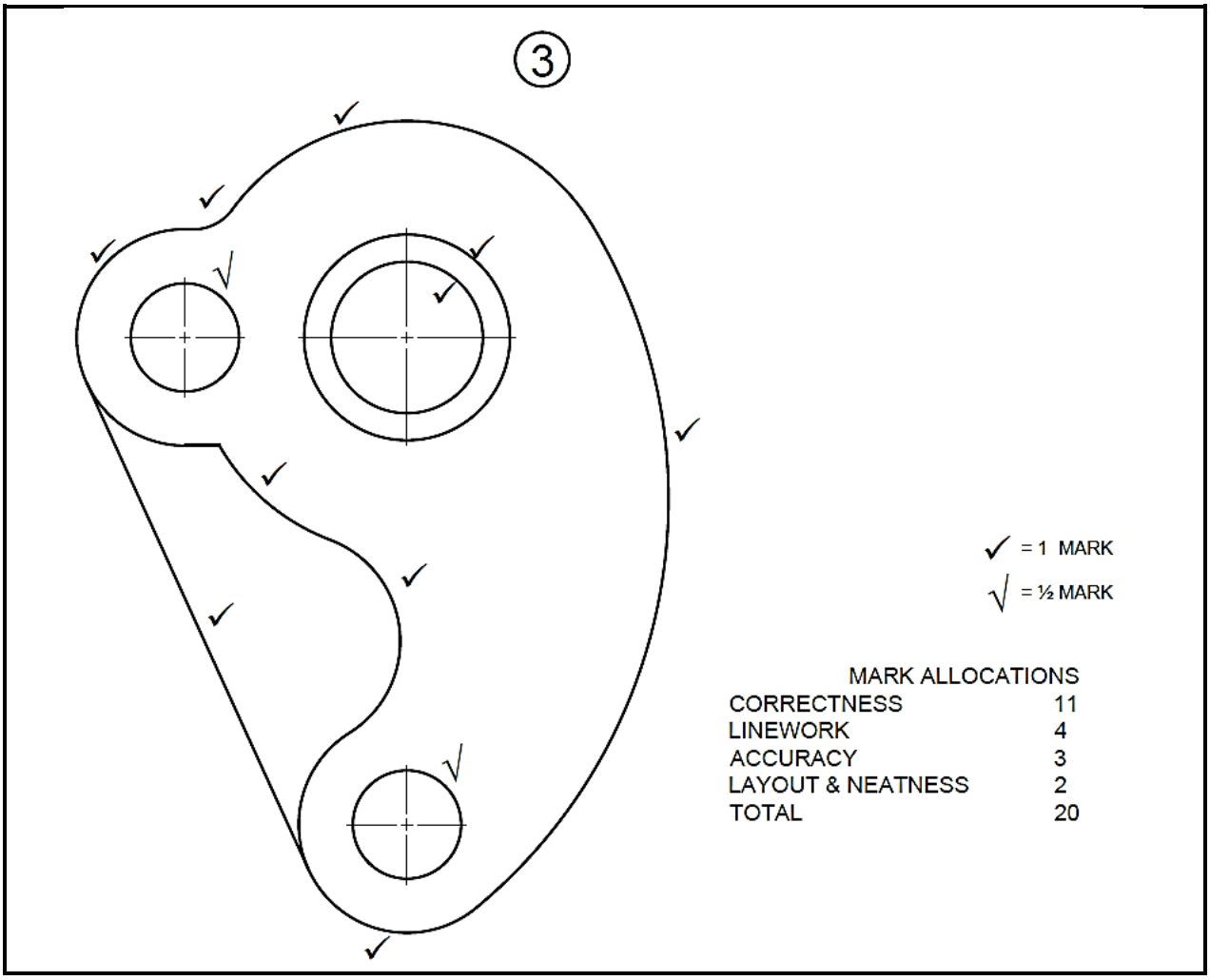

FIGURE 2 **[20]**

QUESTION 4

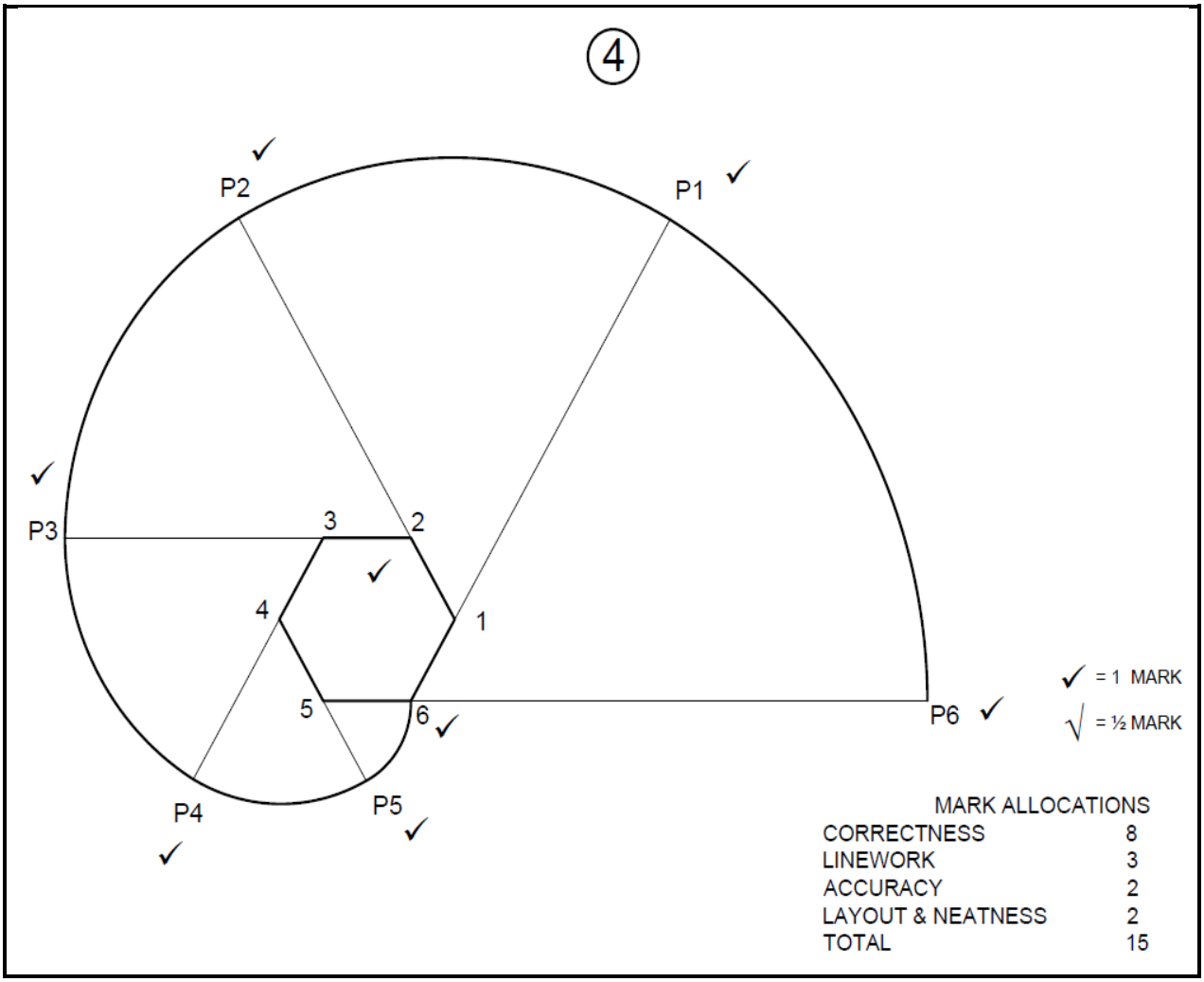

FIGURE 3 **[15]**

QUESTION 5

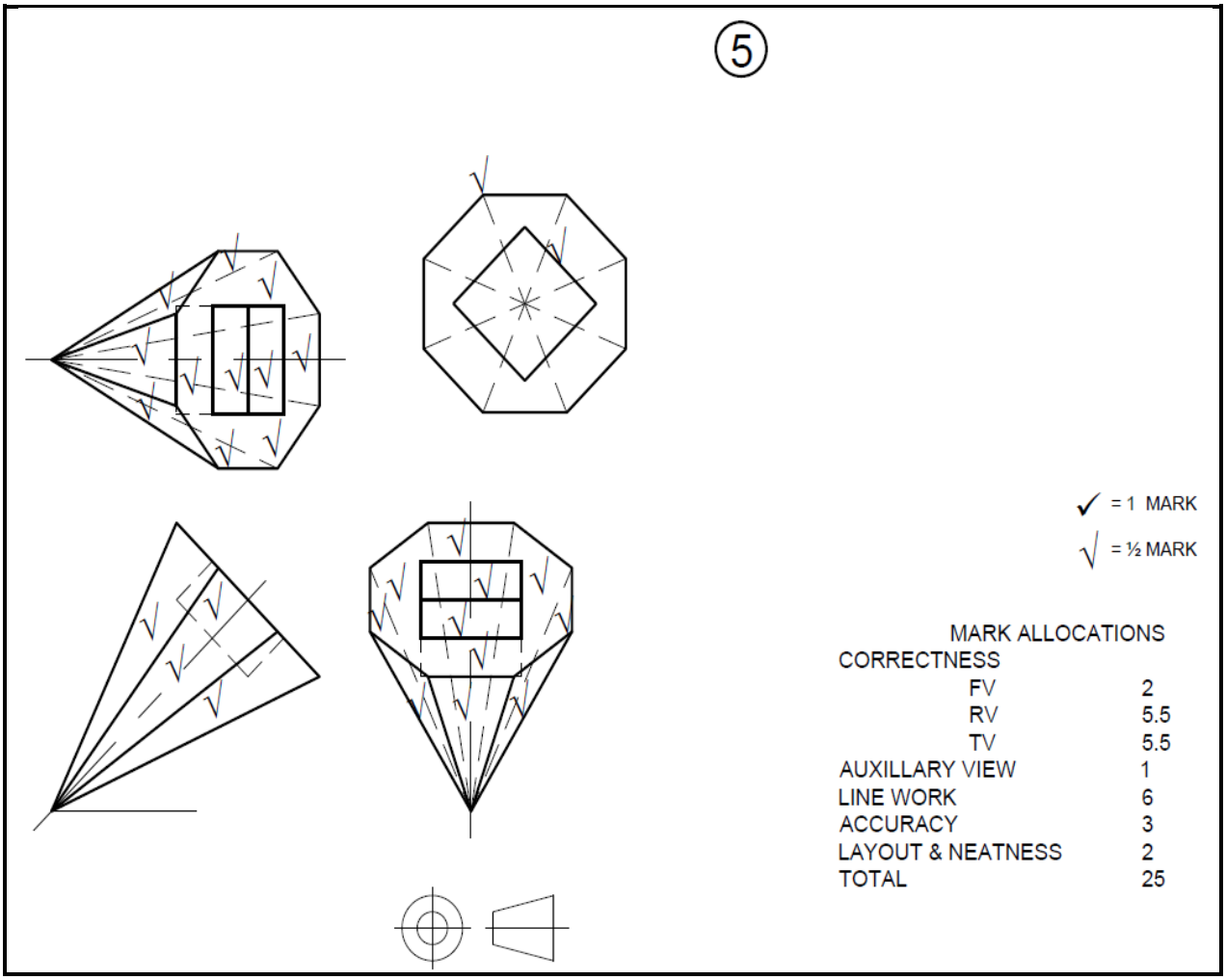

FIGURE 4 **[25]**

QUESTION 6

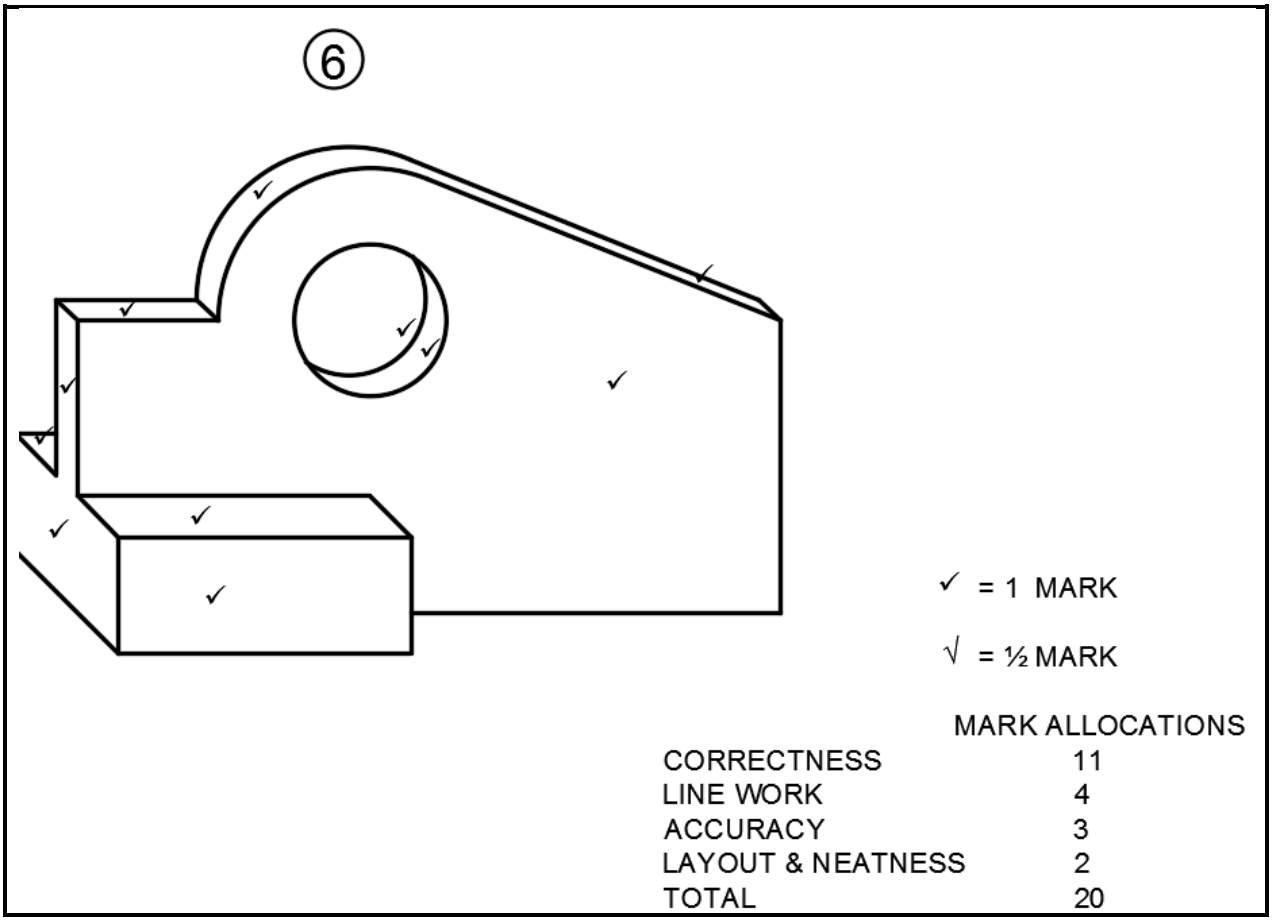

FIGURE 5 **[20]**

TOTAL: 100

Copyright reserved