higher education & training

Department:
Higher Education and Training
REPUBLIC OF SOUTH AFRICA

NATIONAL CERTIFICATE (VOCATIONAL)

ENGINEERING FABRICATION

(Second paper)

NQF LEVEL 2

(6031002)

1 December 2023 (Y-paper)
13:00–16:00

This question paper consists of 5 pages.

Copyright reserved

DEPARTMENT OF HIGHER EDUCATION AND TRAINING
REPUBLIC OF SOUTH AFRICA

NATIONAL CERTIFICATE (VOCATIONAL)
ENGINEERING FABRICATION
NQF LEVEL 2
PAPER 2
TIME: 3 HOURS
MARKS: 75

INSTRUCTIONS AND INFORMATION

1. Answer all the questions.
2. Read all the questions carefully.
3. Number the answers according to the numbering system used in this question paper.
4. Answer two questions on one side of the drawing paper and the third on the reverse side.
5. Use only a pencil to make drawings and a black pen to write your ID number.
6. Write neatly and legibly.

Copyright reserved

QUESTION 1

FIGURE 1 below shows a hexagonal pipe that has been cut at angles of 30° and 45° respectively.

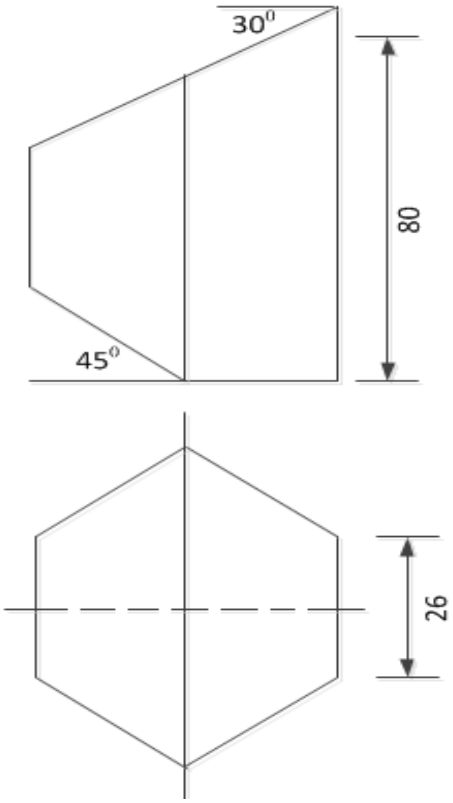

FIGURE 1

1.1 Draw to a scale of 1:1 the following:

The given view. (4)

1.2 Use the parallel-line method to develop the pattern of the hexagonal pipe. (14)

Mark allocation for drawing practice:

Accuracy	Neatness	Line work	Title and scale
3	1	2	1

(7)

NOTE: Open the development on the left-hand side.

[25]

Copyright reserved

QUESTION 2

FIGURE 2 below shows a right cone that has been cut parallel to the base diameter and at angles of 30° and 45° respectively.

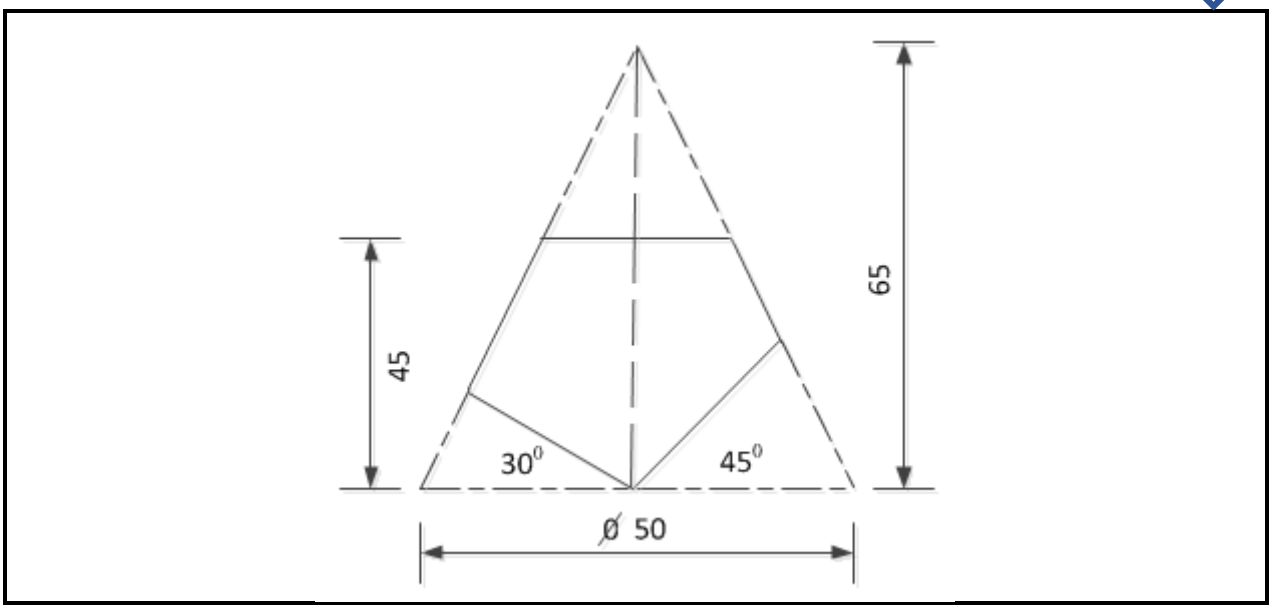

FIGURE 2

2.1 Draw to a scale of 1:1 the following:

The given view. (4)

2.2 Use the radial-line method to develop the pattern of the cone. (14)

Mark allocation for drawing practice:

Accuracy	Neatness	Line work	Title and scale
3	1	2	1

(7)

NOTE: Open the development on the shorter side.

[25]

QUESTION 3

FIGURE 3 below shows two views of a rectangular-to-rectangular transition piece.

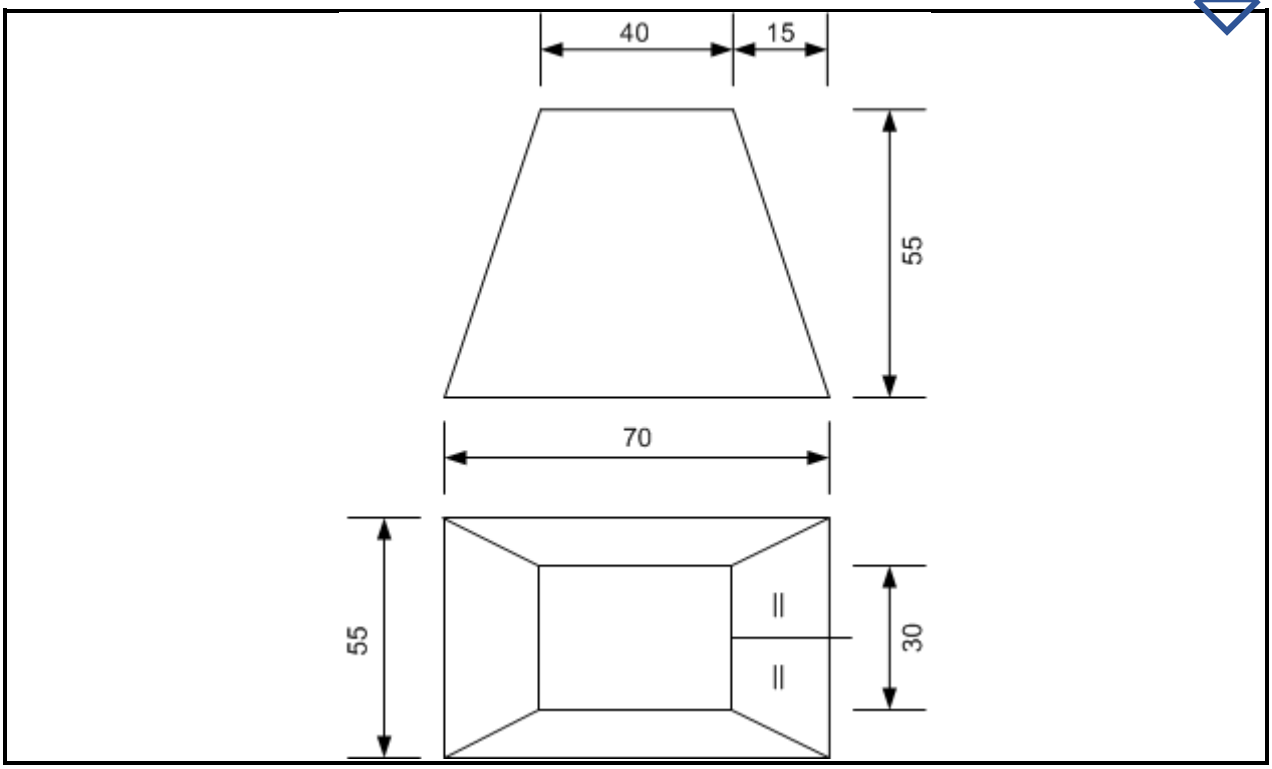

FIGURE 3

3.1 Draw to a scale of 1:1 the following:

The given view. (5)

3.2 Use the triangulation method to develop the pattern of the rectangular-to-rectangular transition piece. (13)

Mark allocation for drawing practice:

Accuracy	Neatness	Line work	Title and scale
3	1	2	1

(7)

NOTE: Open the development on the side marked with equal signs.

[25]

TOTAL: 75

Copyright reserved