higher education & training

Department:
Higher Education and Training
REPUBLIC OF SOUTH AFRICA

MARKING GUIDELINE

NATIONAL CERTIFICATE (VOCATIONAL)

ENGINEERING FABRICATION
NQF LEVEL 2
(Second paper)

27 November 2024

This marking guideline consists of 4 pages.

Copyright reserved

QUESTION 1

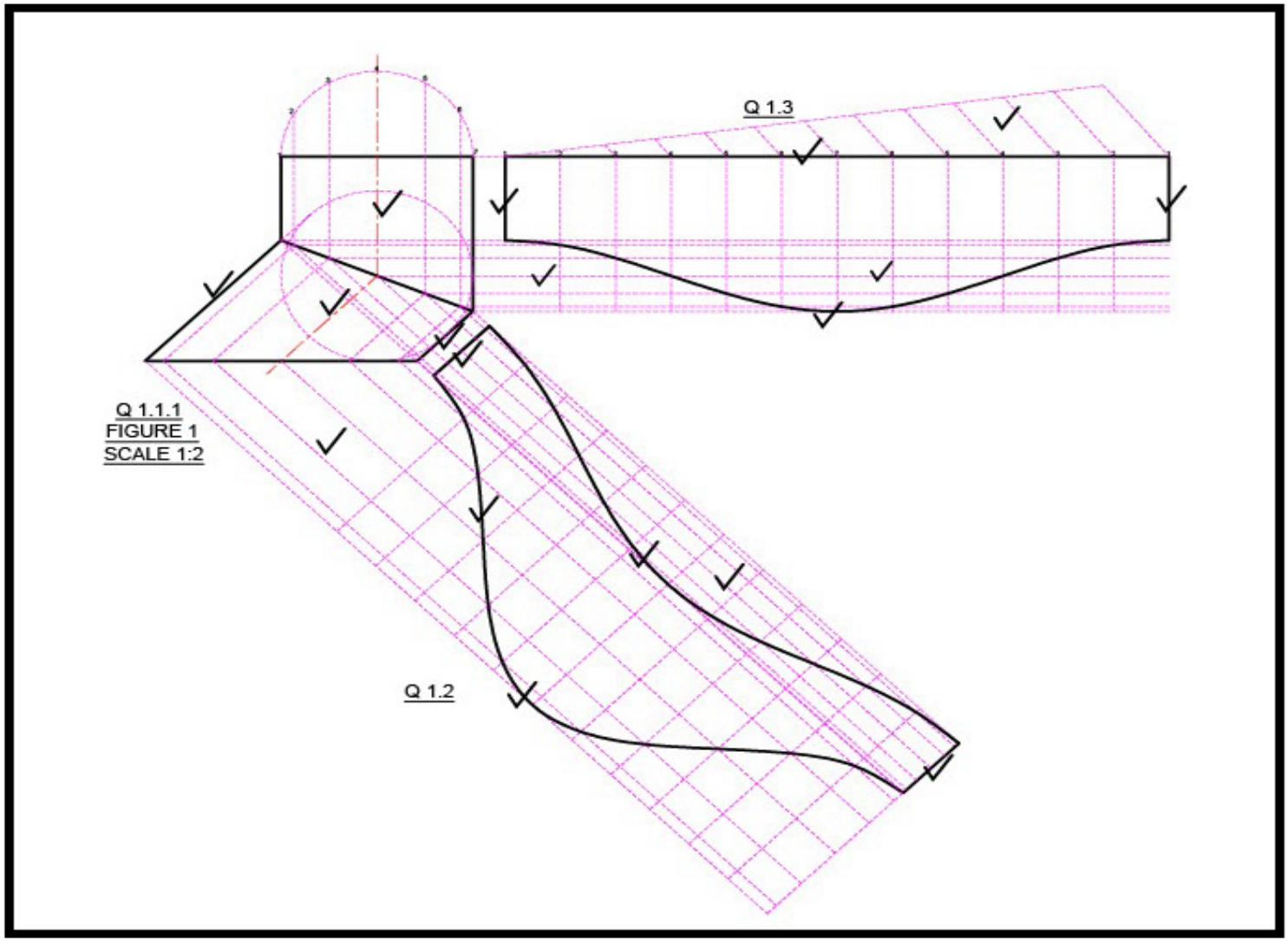

GV	4
DEV1	7
DEV2	7
A/C	3
N/T	1
L/W	2
T/S	1
TOTAL	**25**

Copyright reserved

QUESTION 2

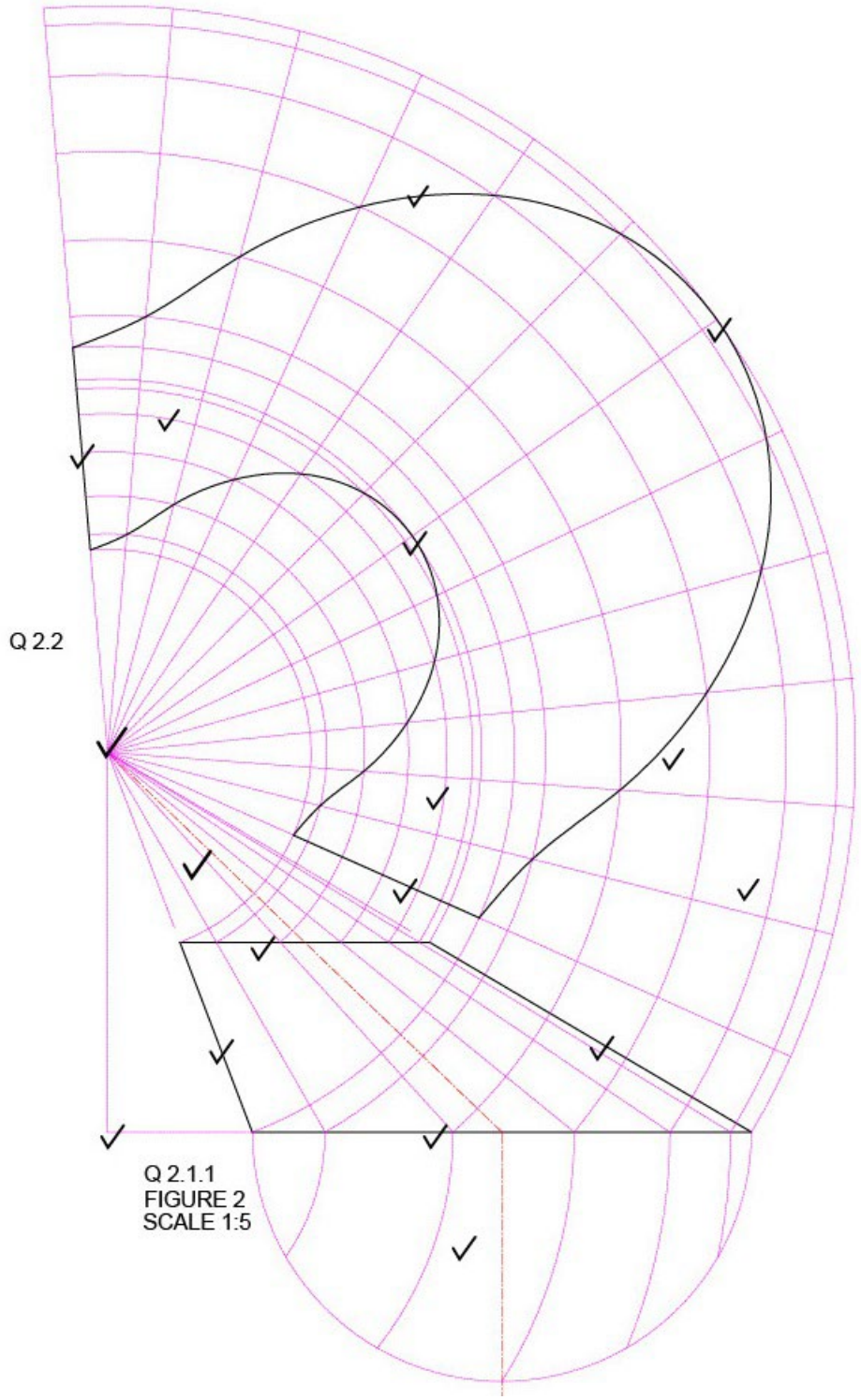

GV	4
DEV	14
A/C	2
N/T	1
L/W	3
T/S	1
TOTAL	**25**

QUESTION 3

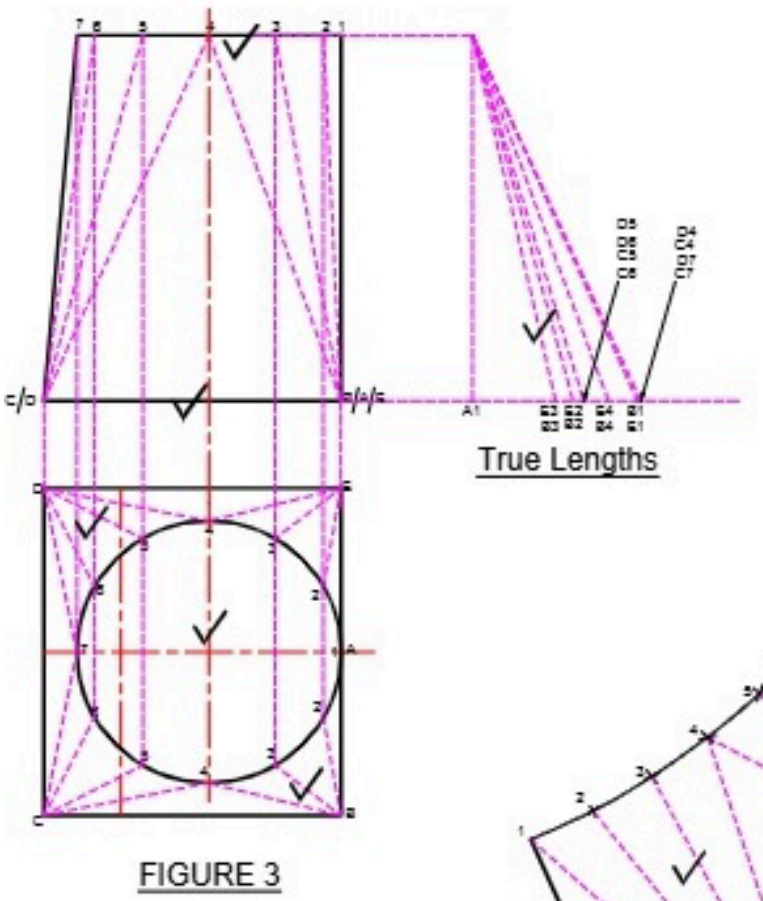

FIGURE 3

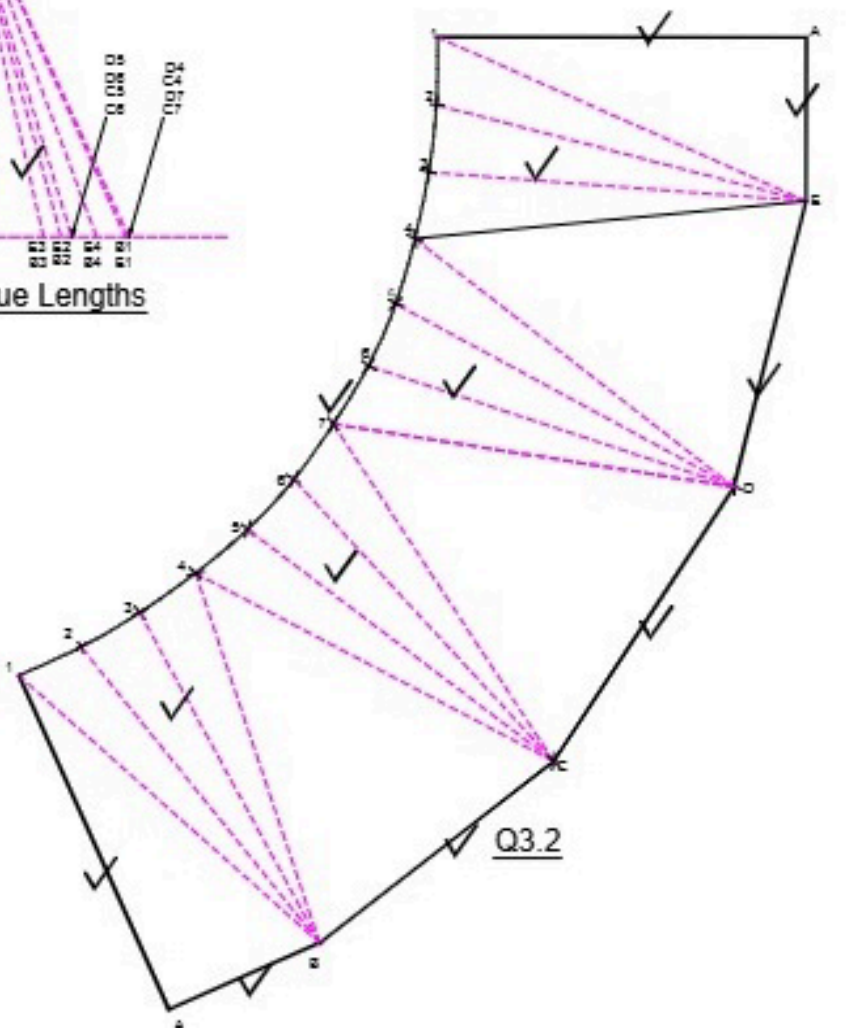

GV	5
DEV	13
A/C	3
N/T	1
L/W	2
T/S	1
TOTAL	**25**

Copyright reserved