higher education & training

Department:
Higher Education and Training
REPUBLIC OF SOUTH AFRICA

MARKING GUIDELINE

NATIONAL CERTIFICATE (VOCATIONAL)

ELECTROTECHNOLOGY
NQF LEVEL 2

15 November 2024

This marking guideline consists of 6 pages.

Copyright reserved

QUESTION 1

1.1 1.1.1 E
1.1.2 B
1.1.3 F
1.1.4 A
1.1.5 D

(5 × 1) (5)

1.2 1.2.1 $R_P = \frac{R_1 \times R_2}{R_1 + R_2}$ *or* $\frac{1}{R_P} = \frac{1}{R_1} + \frac{1}{R_2}$

$= \frac{2 \times 4}{2 + 4}$ ✓ $\frac{1}{R_P} = \frac{1}{2} + \frac{1}{4}$

$= 1{,}333\ \Omega$ ✓ $\frac{1}{R_P} = \frac{3}{4}$

$R_P = 1{,}333\ \Omega$

$R_T = R_P + R_3$

$= 1{,}333 + 3$

$= 4{,}333\ \Omega$✓ (3)

1.2.2 $I_T = \frac{V_T}{R_T} = \frac{12}{4.333}$ ✓ $= 2{,}769\ A$ ✓ (2)

1.2.3 $V_3 = I_T \times R_3$

$= 2{,}769 \times 3$ ✓

$= 8{,}307\ V$ ✓ (2)

1.2.4 $V_T = V_P \times V_3$

$V_P = V_T - V_3$

$V_P = 12 - 8{,}307$

$V_P = 3{,}693\ V$ ✓

$I_{R4} = \frac{V_P}{R_4} = \frac{3{,}693}{4} = 0{,}923\ A$ ✓ (2)

1.3 1.3.1 $Turns\ ratio = \frac{V_1}{V_2}$

$Turns\ ratio = \frac{3450}{230}$ ✓

$Turns\ ratio = 15:1$✓

1.3.2 $\frac{N_1}{N_2} = \frac{V_1}{V_2}$

$N_2 = \frac{V_2 \times N_2}{V_1}$

$N_2 = \frac{230 \times 300}{3450}$ ✓

$N_2 = 20\ turns$ ✓

1.3.3 $\frac{I_2}{I_1} = \frac{V_1}{V_2}$

$I_1 = \frac{V_2 \times I_2}{V_1}$

$N_2 = \frac{230 \times 15}{3450}$ ✓

$N_2 = 1\ A$ ✓

(3 × 2) (6)

[20]

QUESTION 2

2.1 2.1.1

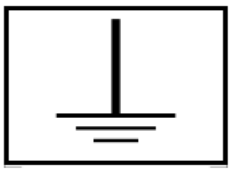

2.1.2

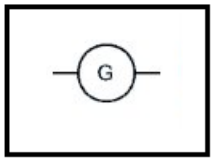

2.1.3

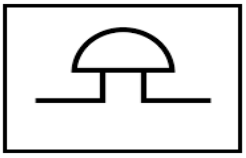

(3 × 1) (3)

2.2

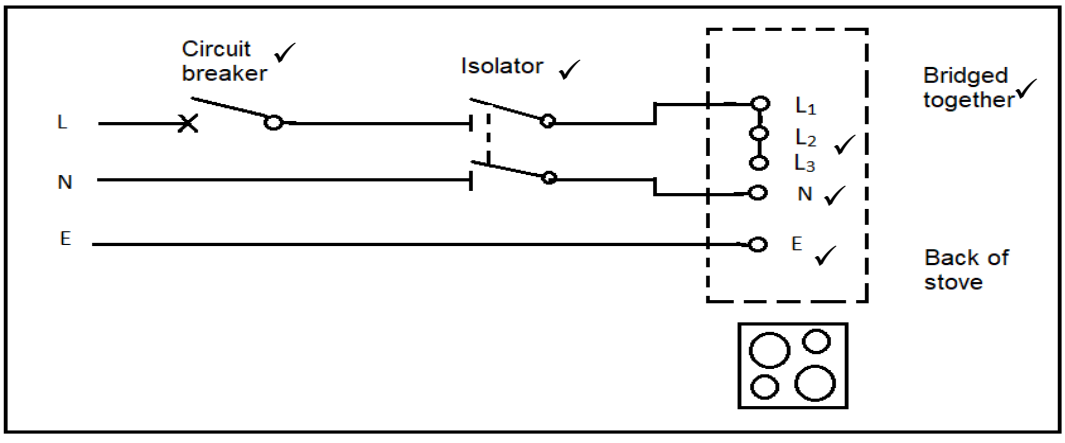

(6)

2.3 2.3.1 20 A
2.3.2 2.5 mm^2
2.3.3 40 A
2.3.4 6 / 8 mm^2
2.3.5 20 A or 30 A
2.3.6 4 mm^2

(6 × 1) (6)

2.4
- Flat file
- Half-round file
- Round file
- Triangular file
- Square file (Any 4×1) (4)

2.5 Direct contact occurs when a body part touches a live wire or part directly.✓

Indirect contact occurs when a live part touches a piece of metal, and the body comes into contact with the live metal.✓ (2)

2.6 2.6.1 To cut conductors

2.6.2 To make sure that the enclosure is vertical or horizontally straight

2.6.3 To bend PVC conduit

2.6.4 To cut the conduit to the required length

(4 × 1) (4)
[25]

QUESTION 3

3.1
- Connect the red lead (+) to the anode and the black lead (-) to the cathode.✓ The diode will conduct, and the meter will display a value.✓
- Reverse the connection and connect the red lead (+) to the cathode and black lead (-) to the anode.✓ The diode should not conduct.✓ (4)

3.2 ✓

ITEM NUMBER	DESCRIPTION	QUANTITY
1	Resistors	4✓
2	LED	2✓
3	Polarized capacitor	2✓
4	NPN transistor	2✓
5	Battery or Cells	1 or 2✓

(6)

3.3
- Always clean the tip of the soldering iron during and after soldering.
- Always unplug the soldering iron from the power supply.
- Return the soldering iron to its stand after use.
- Always make sure that the cable of the soldering iron is not broken or entangled. (Any 3 × 1) (3)

3.4 A – Transformer
B – Rectifier
C – Filter
D – Regulator
E – Fuse
F – Open switch (6)

3.5

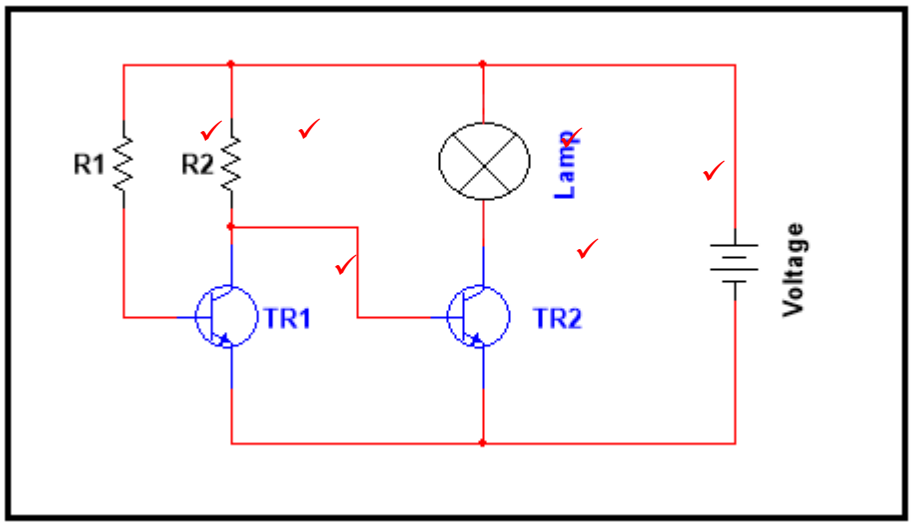

(6)
[25]

QUESTION 4

4.1 4.1.1 True
4.1.2 False
4.1.3 False
4.1.4 False
4.1.5 True
(5 × 1) (5)

4.2
- Insulation resistance test
- Continuity test (2)

4.3 4.3.1 Dimmer✓ – The voltage will be dropped equally across the three bulbs. Before adding an extra bulb, the voltage across each bulb was 6 V✓ and when an extra bulb is added, the voltage drop across each bulb will be 4 V.✓ (3)

4.3.2 The current will not flow if Bulb 2 is blown. (2)

4.4 4.4.1 $$R_P = \frac{R_1 \times R_2}{R_1 + R_2}$$

$$= \frac{15 \times 35}{15 + 35} \checkmark$$

$$\therefore R_T = R_P = 10{,}5\ \Omega \checkmark$$

$$I_{A1} = \frac{V_T}{R_T} = \frac{12}{10{,}5} \checkmark = 1{,}143\ A \checkmark$$ (4)

4.4.2 $$I_{A2} = \frac{V_T}{R_1} = \frac{12}{15} \checkmark = 0{,}8\ A \checkmark$$ (2)

4.4.3 $$I_{A3} = \frac{V_s}{R_2} = \frac{12}{35} \checkmark = 0{,}343\ A \checkmark$$ (2)

[20]

QUESTION 5

5.1
- Preventive maintenance:✓ These are activities that are performed routinely to extend the life or increase the performance of equipment.✓
- Corrective maintenance:✓ These are activities done because or partial or total equipment failure.✓
- Predictive maintenance:✓ These activities are used to predict the performance of an equipment item over a long period of time. (Any 2 × 2) (4)

5.2
- It helps to finish tasks according to scheduled times.
- It helps to prioritize the sequence of tasks necessary to achieve the goals.
- It assists when orders are to be made and received.
- It helps to keep you aware of what has been completed and what still needs to be done. (Any 3 × 1) (3)

5.3
- Gloves
- Safety glasses
- Hard hat
- Safety boots or protective footwear
- Protective clothing (Any 3 × 1) (3)

[10]

TOTAL: 100

Copyright reserved